U.S. Department of Labor

Office of the Assistant Secretary
for Administration and Management
Washington, D.C. 20210

October 20, 2014

The Honorable Tom Corbett
Governor
Office of the Governor
508 E-Floor
Main Capitol Building
Harrisburg, PA 17120

Dear Governor Corbett:

This letter acknowledges that Pennsylvania's updated Methods of Administration (MOA) nondiscrimination plan was received by the U.S. Department of Labor's Civil Rights Center (CRC) on July 29, 2014.

Please note that CRC no longer "certifies" or otherwise approves MOA submissions. While the MOA remains an important tool for ensuring nondiscrimination and equal opportunity in the workforce development system, CRC now focuses on States' actual implementation of the plans. We expect each State's Governor to be vigilant in taking the actions described in his or her State's MOA, in order to guard the civil rights of customers and employees of, and applicants to, their workforce systems.

We would like to remind you of two important MOA-related obligations under the regulations implementing the nondiscrimination provisions of the Workforce Innovation Opportunity Act (WIOA):

First, the Governor must promptly update the MOA whenever necessary, and must notify the CRC Director in writing at the time that any such updates are made. See 29 CFR 37.55(b).

Second, every two years from the date on which the initial MOA was submitted to the Director (for Pennsylvania, this was July 11, 2000), the Governor must review the MOA and the manner in which it has been implemented, and determine whether any changes are necessary for the State to comply fully and effectively with the nondiscrimination and equal opportunity provisions of WIOA and 29 CFR Part 37.

If any such changes are necessary, the Governor must make the appropriate changes and submit them, in writing, to the Director. If the Governor determines that no such changes are necessary, s/he must certify, in writing, to the Director that the MOA previously submitted continues in effect. See 29 CFR 37.55(c). For Pennsylvania, the next MOA review should be conducted, and the revised MOA or Governor's certification submitted to CRC, before July 11, 2016.

Thank you for your important role in ensuring that everyone has the opportunity to fully participate in the workforce development system. If you have any questions or need civil rights-related technical assistance, please contact the Civil Rights Center's Office of Compliance and Policy at via email to civilrightscenter@dol.gov or by phone at 202-693-6501 (voice) or 800-877-8339 (Federal Relay Service – for TTY).

Sincerely,

Roger Ocampo
Chief
Office of Compliance and Policy
Civil Rights Center

cc: Lenita-Jacobs Simmons
The Curtis Center
170 South Independence Mall West
Suite 825 East
Philadelphia, PA 19106

Julia K. Hearthway
Secretary of Labor & Industry
Pennsylvania Department of Labor and Industry
651 Boas Street
Room 1700
Harrisburg, PA 17121

Rhonda Ross
Acting Director for Office of EO
Department of Labor & Industry
Office of Equal Opportunity
651 Boas Street
Room 1402
Harrisburg, PA 17121

COMMONWEALTH OF PENNSYLVANIA
DEPARTMENT OF LABOR & INDUSTRY
HARRISBURG, PENNSYLVANIA 17121

THE SECRETARY

Date: June 23, 2014

To: Kathy Bruder
Deputy Chief of Staff
Office of the Governor

From: Julia K. Hearthway
Secretary

Attached for the Governor's signature is a cover sheet for a document titled Methods of Administration (MOA). The purpose of the MOA is to ensure that programs benefiting from Workforce Investment Act of 1998 funds comply with federal non-discrimination and equal opportunity regulations and requirements.

Federal regulations require review of the MOA every two years be signed by the Governor. Following that review, a state must either modify its MOA or certify that no revision is necessary. The attached MOA includes minor administrative updates; the substance of the document remains unchanged.

Thank you for your attention to this matter. Please do not hesitate to contact me if you have any questions.

cc: Leslie Gromis, Chief of Staff

I, Tom Corbett, Governor of Pennsylvania, have reviewed and approved the attached Department of Labor & Industry's 2014 Methods of Administration (MOA) plan.

Tom Corbett

Tom Corbett

Governor of Pennsylvania

Department of Labor & Industry | 651 Boas Street, Room 1700 | Harrisburg, PA 17121-0750
717.705.2630 | Fax 717.787.8826 | www.dli.state.pa.us

Auxiliary aids and services are available upon request to individuals with disabilities.
Equal Opportunity Employer/Program

pennsylvania
DEPARTMENT OF LABOR & INDUSTRY
OFFICE OF EQUAL OPPORTUNITY

To: Janet Anderson
Deputy Secretary for Administration

From: Rhonda D. Ross RDR
Director
Office of Equal Opportunity

Date: June 19, 2014

RE: Labor and Industry Method of Administration (MOA) Plan

The Department of Labor and Industry's 2014 Method of Administration Plan and its related attachments is attached for your review.

Upon your approval, please forward the Plan and attachments to Secretary Hearthway for her approval and signature. Upon obtaining Secretary Hearthway's signature, please return the documents to the Office of Equal Opportunity, for duplication and official transmittal to Governor Corbett's Office. If you have any questions or would like to discuss any of the attached components, please feel free to contact me. Thank you.

pennsylvania
DEPARTMENT OF LABOR & INDUSTRY
OFFICE OF EQUAL OPPORTUNITY

To: Julia K. Hearthway
Secretary

From: Rhonda D. Ross RDR
Director
Office of Equal Opportunity

Date: June 19, 2014

RE: Labor and Industry Method of Administration (MOA) Plan

The Department of Labor and Industry's 2014 Method of Administration Plan and its related attachments is attached for your review and signature, along with a letter to the Governor outlining the purpose of the State's MOA Plan.

Upon your approval, please return the documents to the Office of Equal Opportunity, for duplication and official transmittal to Governor Corbett's Office. If you have any questions or would like to discuss any of the attached components, please feel free to contact me at 772-9197. Thank you.

COMMONWEALTH OF PENNSYLVANIA
DEPARTMENT OF LABOR & INDUSTRY
HARRISBURG, PENNSYLVANIA 17121

THE SECRETARY

Date: June 23, 2014

To: Kathy Bruder
Deputy Chief of Staff
Office of the Governor

From: Julia K. Hearthway
Secretary

Attached for the Governor's signature is a cover sheet for a document titled Methods of Administration (MOA). The purpose of the MOA is to ensure that programs benefiting from Workforce Investment Act of 1998 funds comply with federal non-discrimination and equal opportunity regulations and requirements.

Federal regulations require review of the MOA every two years be signed by the Governor. Following that review, a state must either modify its MOA or certify that no revision is necessary. The attached MOA includes minor administrative updates; the substance of the document remains unchanged.

Thank you for your attention to this matter. Please do not hesitate to contact me if you have any questions.

cc: Leslie Gromis, Chief of Staff

I, Tom Corbett, Governor of Pennsylvania, have reviewed and approved the attached Department of Labor & Industry's 2014 Methods of Administration (MOA) plan.

Tom Corbett

Governor of Pennsylvania

DEPARTMENT OF LABOR & INDUSTRY

METHODS OF ADMINISTRATION (MOA) PLAN

TABLE OF CONTENTS

- **METHODS OF ADMINISTRATION ELEMENTS (1-9)**
- **ATTACHMENT A – Strategic State Workforce Investment Plan**
- **ATTACHMENT B – Organization Charts**
  Department of Labor & Industry
  Office of Equal Opportunity
- **ATTACHMENT C – Department's Policy Statements**
- **ATTACHMENT D – Limited English Proficiency (LEP) Plan**
- **ATTACHMENT E – Nondiscrimination and Equal Opportunity Self-Evaluation Guide (NEOSEG)**

Methods of Administration for Equal Opportunity Compliance in the Workforce Investment Act Programs

The Methods of Administration (MOA) is a written assurance, with supporting documentation that describes the actions an individual State will take to ensure that its Workforce Investment Area (WIA) Title-I financially assisted programs, activities, and recipients are complying and will continue to comply with the nondiscrimination and equal opportunity requirements of WIA and its implementing regulations.

The Commonwealth of Pennsylvania assures that it will ensure compliance with Section 188 of the Workforce Investment Act, 29 CFR Part 37, Age Discrimination Act of 1975, Section 504 of the Rehabilitation Act of 1973, Title IX, Education Amendments of 1972 and Title VI, Civil Rights Act of 1964, Americans with Disabilities Act and all other regulations that seek to ensure non-discrimination. The Office of Equal Opportunity in the Department of Labor & Industry is responsible for implementing and monitoring the agency's compliance with nondiscrimination and equal opportunity provisions of WIA.

States were first required to prepare and submit MOAs in 1984 under the Job Training Partnership Act (JTPA). The requirement was continued in 1993 under the regulations implementing the nondiscrimination and equal opportunity provisions of JTPA. Under WIA, the form and concepts of the MOA remain substantially the same as in the JTPA MOA.

Pennsylvania's MOA details the Commonwealth's commitment to compliance with Section 188 of the Workforce Investment Act (WIA) and 29 CFR Part 37's equal opportunity and nondiscrimination provisions. Based on federal regulations, Pennsylvania's MOA includes the following nine required elements:

1. Designation of State and local level Equal Opportunity Officers
2. Equal Opportunity Notice and Communication
3. Assurances
4. Universal Access
5. Compliance with Disability Requirements
6. Data and Information Collection and Maintenance
7. Equal Opportunity Monitoring
8. Complaint Processing Procedures
9. Corrective Action and Sanctions

Submission and Approval

Pennsylvania's first MOA was submitted to the Civil Rights Center – U.S. Department of Labor in September 2000, approved on March 19, 2001, and recertified most recently in May 2010.

This 2014 Methods of Administration (MOA) document details the steps Pennsylvania has taken and will continue to take to ensure that all Workforce Investment Act of 1998, Title I financially-assisted programs, activities and recipients comply with the nondiscrimination and equal opportunity requirements pursuant to Section 188 of the Workforce Investment Act (WIA) of 1998 and its implementing regulations.

The Commonwealth of Pennsylvania Department of Labor & Industry, under the direction of Julia K. Hearthway, Secretary, is the State agency responsible for overseeing the Employment Service, Unemployment Insurance and Workforce Investment Act programs in Pennsylvania. The Secretary is the top agency official, appointed by Governor Tom Corbett of Pennsylvania to oversee the management, administration, and implementation of the Commonwealth's workforce investment/development strategy. As such, the MOA will apply to all programs to which financial assistance under WIA Title I is extended.

The current document represents Pennsylvania's submission for recertification of the MOA. All inquiries regarding this document should be directed to:

Ms. Rhonda D. Ross, Director
Office of Equal Opportunity
Pennsylvania Department of Labor & Industry
651 Boas Street, Room 1402
Harrisburg, Pennsylvania 17121
(717) 787-1182 or 800-622-LIAA (5422)
TTD/TTY (800) 654-5984
PA Relay 711

ELEMENT 1.

Designation of State and Local Level Equal Opportunity Officers (37.23)

The State should address how it and its recipients are complying and will continue to comply with the requirements of 37.23-37.28. The intent of this section is to ensure that the individual(s) the recipient appoints as EO Officers(s) have the education, training and experience, and are provided the necessary ongoing training and qualified staff, to perform his/her duties assigned under part 37. Additionally, the EO Officer(s) should not be in a position that would constitute, or appear to constitute, a conflict of interest. Further, the State should ensure that she/he reports, on EO matters, directly to the appropriate official in the organization, 37.25(e) and that she/he otherwise has the authority to direct the State/Local level EO effort.

The individual designated as State-Level Equal Opportunity Officer and each individual designated as Local-level Equal Opportunity Officer, by name, position title, business address (including e-mail address if applicable) and telephone number (including TDD/TTY number. The level within the organization (described in such terms as the individual's authority and position relative to the top of the hierarchy occupied by the EO Officer(s).

- The Senior Level Equal Opportunity Officer for Workforce Investment for the Commonwealth of Pennsylvania is Ms. Rhonda D. Ross, Director of the Office of Equal Opportunity (OEO). Ms. Ross's mailing address is Pennsylvania Department of Labor and Industry, Office of Equal Opportunity, Room 1402 Labor and Industry Building, 651 Boas St., Harrisburg, PA. 17121. She may be contacted by email at rross@pa.gov, or by telephone at (717) 787-1182.

  The Office of Equal Opportunity consists of a staff of seven (7) people - one (1) clerical support staff person and six (6) professionals. Program responsibilities include oversight for the administration of the internal Equal Opportunity (EO) program for the Department and EO Compliance for WIA, SESAs, and OVR programs.

  Ms. Ross reports to Ms. Janet Anderson, Deputy Secretary for Administration, with direct access to Ms. Julia Hearthway, Secretary of the Department of Labor and Industry. Secretary Hearthway has been designated by the Governor to implement the Workforce Investment Act of 1998 on his behalf in the Commonwealth of Pennsylvania. She is also responsible for the administration of programs and components in the Department of Labor and Industry, including Equal Opportunity and Nondiscrimination in Workforce Investment Act (WIA) Programs and State Employment Security Agencies (SESA). For clarity, State Employment Security Agencies across the Commonwealth of PA are referred to as CareerLinks and UC Service Centers for WIA purposes.

  There are two Equal Opportunity Specialists in the Federal Programs Unit. Ms. Ina Strain, EO Specialist II, and Ms. Keptsia Hawkins, EO Specialist II.

  Ms. Hawkins, EO Specialist II, is responsible for coordinating the State's responsibilities under 29 CFR Part 37 and monitors all phases of EO in State Employment Security Agencies. Ms. Ina Y. Strain, Equal Opportunity Specialist II, is responsible for Section 504, ADA, and Office of Vocational Rehabilitation Equal Opportunity Compliance.

The manner in which the recipient makes the identity of the EO Officer(s) known to applicants, registrants, eligible applicants/registrants, participants, employees, and applicants for employment, as well as interested members of the public.

- The EO Officer's identity is made known through the public display of 'Equal Opportunity is the Law' posters, distribution of pamphlets and booklets, through the issuance of an annual Policy Statement, the Civil Rights Statement, Internet, Intranet and through the designated Equal Opportunity Liaison within each CareerLink and UC Service Center, as well as, the WIA Policies and Procedures Manual and through contact with the Equal Opportunity Officers for WIA. The Equal Opportunity Officer's names, position title, address and telephone number (including TDD/TTY) will be included on all of the above-mentioned internal and external communications.

The level of staff and other resources available to State and Local level EO Officer(s) to ensure that WIA Title 1- financially assisted programs and activities operate in a non-discriminatory way.

- All staff positions within the Office of Equal Opportunity are full-time. The WIA component located in the Federal Programs Unit is comprised of two (2) full-time employees for LWIA/CareerLinks, UC Service Centers and the Office of Vocational Rehabilitation (OVR). An organizational chart depicting the Office of Equal Opportunity's staff and organizational position within the Department of Labor & Industry is attached. (See Attachment B; OEO Organizational Chart). All resources of the Office of Equal Opportunity are made available to State and Local level EO Officer(s) when it pertains to EO matters. ***(See: Strategic State Plan Attachment A; XI. Assurances; page 119)***

The State's plan for ensuring that State and local level EO Officers and their staff are sufficiently trained to maintain competency.

The Office of Equal Opportunity will provide Methods of Administration Training in three central locations throughout the Commonwealth for local level EO Officers, EO Liaisons, Site Administrators and Workforce Investment Board Staff. L&I's OEO has attended and/or participated in the following training:

Two staff members attended the NASWA 2013 Equal Opportunity in the Workforce System Training Meeting

- OEO will schedule Technical Assistance for Local WIA Equal Opportunity Officers and CareerLink/UC Service Center Liaisons on an on-going and an 'as needed' basis. For January 2012-December 2013, Technical Assistance sessions were conducted in CareerLinks and 13 in LWIA. OEO will provide Equal Opportunity Orientation training for all UC Service Center and CareerLink employees and partners on an ongoing basis.

The identity, by name, title and organization, of the individual to whom the State and Local level EO Officer(s) reports on equal opportunity matters.

- *See MOA; Narrative; Element 1, Page 3 pertaining to Director, Office of Equal Opportunity.*

A description of the professional and support staffing levels and resources provided to each State and Local level EO Officer to assist him or her in ensuring compliance with WIA Section 188 and 29 CFR Part 37.

- Other support staff and resources include one Clerk Typist III. . Under the direct supervision of the Director, the incumbent performs complex clerical duties, which require the utilization of typing skills and application of quasi-independent judgment for all Equal Opportunity (EO) Compliance Programs, and related activities for the entire office.

The type and level of training each State and Local level EO Officer has received and will receive to ensure that he or she is capable of fulfilling his or her responsibilities as an EO Officer.

- Training will be conducted on a continual basis, as it becomes available at the Federal or State levels; or through professional organizations. OEO staff will attend the Annual National Civil Rights Center (CRC) Training Conference, if permitted; each year as well as other CRC sponsored training. The Office of Equal Opportunity has provided training for local level Equal Opportunity Officers/Liaisons and will ensure that all local Equal Opportunity Officers/Liaisons are aware of the National training conference.

The means by which the State makes public the names, position titles and telephone numbers (including TDD/TTY numbers) of each State and Local level EO Officer.

- *See MOA; Element 1, Page 4*

A description of any duties, other than WIA equal opportunity responsibilities, assigned to each State and local level EO Officer.

- All Equal Opportunity positions are full-time. ***(Refer to MOA; Element 1, Attachment B-OEO Organizational Chart)***

ELEMENT 2.

Notice and Communication (37.29 through 37.36)

In this element, the State should address how it and its recipients are complying and will continue to comply with the requirements of 37.29 through 37.36. States should ensure the establishment of a notice and communication system that makes all registrants, applicants, eligible applicants/registrants, applicants for employment, employees and interested members of the public aware of the recipient's obligation to operate in a nondiscriminatory manner, and further, the extent of the right of members of these groups to file complaints of discrimination.

The method and frequency of the notice, including initial dissemination.

- An Equal Opportunity Policy Statement is disseminated annually and "Equal Opportunity is the Law" posters (copy attached) will be distributed to each UC Service Center/CareerLink office to be posted in highly visible areas within the UC Service Center/CareerLink to provide continuing notice that it does not discriminate and to ensure compliance with nondiscrimination and equal opportunity provisions. **(See Attachment C Policy Statements)**

  Additionally, the "Equal Opportunity is the Law" statement has been included in the Pennsylvania Unemployment Compensation Handbook (UCP-1). The UCP-1 has been revised and appropriate accurate language has been included. The Handbook, which includes the Equal Opportunity statement and notice to the claimants about their civil rights, is given to each UC claimant. Applicants who complete registration through the Internet cannot complete the registration process unless they acknowledge they have read and understood their civil rights.

  Notification of policies and rights, stating that it does not discriminate, are communicated to recipients of WIA Title I - federally funded programs and activities, including those with impaired vision or hearing, in various formats. An Equal Opportunity Policy Statement will be disseminated to all WIA programs within the Commonwealth of Pennsylvania. The "Equal Opportunity is the Law" poster has been developed in English and Spanish, as well as, alternate formats and has been disseminated to the WIA programs. The Department of Labor & Industry requires that posters be displayed in prominent locations throughout significant areas in applicable facilities.

The means by which the notice is made available to individuals with disabilities.

- Each applicant/claimant, (including applicants/claimants with disabilities) that registers for work with a Pennsylvania CareerLink will receive notification of their Civil Rights information electronically at the time of registration. Applicants/claimants who file for unemployment benefits receive notification of their Civil Rights information via the UCP-1 form, in the UC Service Centers, which includes the "Equal Opportunity is the Law" information. For individuals with disabilities, information in Braille, readers, or individuals who sign, will be made available, upon request, through the CareerLinks. The Office of Vocational Rehabilitation, in most cases, will be a partner in Pennsylvania CareerLinks. Individuals who wish to register for services at a CareerLink through the Internet will also have access to special equipment, upon request, such as monitor arms for positioning the monitors, standard text enlargement program such as Zoom Text Xtra, for access to "text only" content on the Internet LYNX, for Auditory access to Web content, a Web reader or "talking browser".

  The above-mentioned publications, as well as additional SESA Publications, will contain appropriate tag lines - "Equal Opportunity employer/program," "auxiliary aids and services are available upon request to individuals with disabilities". TDD and relay numbers will be included in publications and appear on the "Equal Opportunity is the Law" poster.

  All UCSCs/CareerLinks/LWIAs will ensure that interested individuals, including individuals with visual or hearing impairments, can obtain information about the existence and location of accessible services, activities, and facilities. Proper signage at entrances along with international symbols will be used at each primary entrance of an accessible facility. Assurance that these requirements are met will be determined during on-site visits and compliance reviews for

structural accessibility and through review of the Americans with Disabilities Act Self-Evaluation Survey ***(See Attachment D Self Evaluation)***. Additionally, all UC Service Centers/CareerLinks/LWIAs will be monitored to assure that, where needed, services are provided in languages other than English to the significant population eligible to receive services, and to ensure that interpreter services are available to effectively communicate with those applicants/claimants with language barriers. ***(Refer to MOA; Element 2, Attachment E-Limited English Proficiency Plan)***

An Equal Opportunity statement will be included on pamphlets; brochures and other publications provided to LWIAs regarding WIA Title I federally funded programs or activities, which state that "Equal Opportunity Employer/Program and auxiliary aids and services are available upon request to individuals with disabilities". Steps have been taken to ensure that communications with individuals with disabilities are as effective as communications with others (refer to 37.9). A TDD/TTY number is also included on the "Equal Opportunity is the Law" posters, pamphlets, brochures, and other publications to accommodate the hearing impaired (29 CFR 37.34 (a)).

The Office of Vocational Rehabilitation/Bureau of Blindness and Visual Services and the Office of Deaf and Hard of Hearing, are located within the Department of Labor and Industry as resources. The Mid-Atlantic ADA Center is also used as a resource.

In addition, the EO Federal Unit is a member of the Pennsylvania Rehabilitation Council.

The means by which States ensure that recipients post the notice.

- Information on where and how the recipient posts notices is discussed at technical assistance training, and monitored through Equal Opportunity Compliance Reviews. Notices must be posted in highly visible areas such as entrances, employee break room bulletin boards, Intranet, etc. The same information is given to each registered applicant, eligible applicant, in handbooks, and electronically if registered through the Internet. UC Service Centers/CareerLinks notices will be posted electronically.

A recipient must provide initial and continuing notice that it does not discriminate on the basis of any factors prohibited by the regulations. The Department of Labor & Industry requires that the "Equal Opportunity is the Law" poster be displayed in prominent locations throughout significant areas of the WIA and offices of sub-recipients. ***(29 CFR 37.33)***

The Equal Opportunity notice is required to be posted prominently in reasonable numbers and places throughout the LWIA. It will be disseminated in internal memoranda and on CareerLink (One Stop) computer screens where participants must acknowledge their Civil Rights as well as handbooks and manuals. The Civil Rights information will become a permanent part of the participants' record. In addition, the notice will be provided in appropriate formats to individuals with vision and hearing impairments. ***(29 CFR 37.31 (a))***

The means by which a copy of the notice is placed in the participant's file or where the files are maintained electronically, how the requirement of 37.31(a) is and will continue to be met.

- Every applicant/claimant requesting services in the Job Center/CareerLink will receive and acknowledge receipt of their Civil Rights including the right to file a complaint by signing a *Statement of Receipt*. The statement will become a permanent part of their applicant/claimant record. Copies of Civil Rights Forms in English and Spanish can be found in the documentation section of MOA, Element #2 ***(See: Strategic State Plan Attachment A; Appendix I.) (Equal Opportunity Compliance Review Guide for SESA Attachment E)***

- When an applicant files for unemployment, a handbook (UCP-1) will be issued either through the mail or given by hand. When the applicant calls for his/her first check, they must acknowledge they received and understood their civil rights. An annotation is put in the computer that civil rights information was received. This annotation is maintained for the life of the claim.

  If an applicant files in person, a signature is accepted as receipt of civil rights and maintained for three years.

  Pennsylvania has implemented the Civil Rights information electronically. Anyone who receives or requests services must first be registered. If for some reason a participant/applicant cannot register on his/her own, an employee of the CareerLink will assist. Additionally, if a participant requests WIA services, they will again receive their Civil Rights through orientation.

  If an applicant/claimant files for services through the Internet they must acknowledge that they have read and understood their Civil Rights. This acknowledgement will be acceptable as a statement of receipt and will be maintained as part of the applicant/claimant file.

The means by which the State ensures that recruitment brochures and other materials routinely made available to the public include the statements "equal opportunity employer/program" and "auxiliary aids and services are available upon request to individuals with disabilities" and, where a telephone number is included on these materials, the State ensures that they indicate a TDD/TTY number or provide for an equally effective means of communication.

- Pennsylvania UC Service Centers and CareerLinks are monitored for their accessibility to individuals with disabilities. Each office has an Americans with Disabilities Act (ADA) self-evaluation document on file (See Documentation). Additionally, each office has TDD and Relay capabilities and has a plan in place for serving the visually impaired, as well as a plan to service limited English Speaking applicants/claimants seeking services. The Disabilities Checklist from the Civil Rights Center will be instituted in all WIA funded programs upon approval at the federal level.

- Copies of the Policy Statement, "Equal Opportunity is the Law" poster, Unemployment Compensation Handbook, Statement of Notification of Civil Rights, Accessibility Guidelines for Effective Communication for People with Disabilities, the Civil Rights Form in Spanish and English and a copy of the ADA Self-Evaluation can be found in the documentation section of MOA Element #2 ***(See: Strategic State Plan Attachment A; Appendix I,)***

  The Office of Equal Opportunity will be responsible for ensuring that the taglines "equal opportunity employer/program" and "auxiliary aids and services are available upon request to individuals with disabilities," as well as TDD/TTY/Relay numbers are included on all material

routinely made available to the public. ***The means by which program-related information is published or broadcast in the news media (e.g., publications of Requests for Proposal) and the means by which the State ensures that publications/broadcasts state that the program is an equal opportunity employer/program and that auxiliary aids and services are available upon request to individuals with disabilities.***

- All recipients of WIA/Title I funds must ensure that all information disseminated to the public through pamphlets, booklets, posters and the Internet includes a statement that the program is an equal opportunity employer/program and that auxiliary aids and services are available to individuals with disabilities. ***(See previous section)***

  When publishing or broadcasting program information in the news media, the E.O. taglines must be included as follows: "Equal Opportunity employers/program, auxiliary aids and services are available upon request to individuals with disabilities." ***(29 CFR 37.34 (b))*** The notification of information required in the dissemination of policies, must also be provided in languages other than English. When a significant part of the eligible population needs information in a language other than English, both the initial notice and other materials must be provided in the needed language taking into consideration program scope and population size. ***(29 CFR 37.35)***

The manner and extent to which information in a language other than English is provided, and the manner in which the State ensures that persons of limited English-speaking ability have access to and use its programs and activities on basis equal to that of those who are proficient in English.

- The Language Line (www.languageline.com) will provide easy access for Department-wide Labor & Industry customers who do not speak English. The Language Line will operate 24 hours a day, 7 days a week and an interpreter will be available within 45 seconds.

  Civil Rights Information will be made available in English and other languages. Based on information provided by the Center for Workforce Information & Analysis (PA – L&I), it has been determined that English is the primary language and Spanish is the second most spoken language in the Commonwealth. The information provided showed all languages in each county in Pennsylvania ***(see Attachment E LEP Plan, Element #2)***. Additional information showed labor force characteristics for employment and unemployment by sex, age, minority, and veteran status. This information is based on 2000 census data, and has been used to identify the significant number or proportion of the population that would be directly affected by a WIA Title I-financially assisted program or activity. These individuals may need services or information in a language other than English, in order to be effectively informed about, or able to participate in the program or activity. If it is determined that a significant proportion of the population in a particular area speaks a language other than English or Spanish the information will then be provided in that language.

  To further ensure that persons with limited English proficiency will have access to programs and activities equal to those who are proficient in English, each CareerLink that has been determined to have a significant Spanish speaking population has a bilingual employee, as well as, the use of the language line. In addition, CareerLinks have agreements with community based organizations, schools, and local colleges, where an interpreter will translate other languages for applicants, claimants, registrants, etc. CareerLinks will also use the services available through other Commonwealth agencies.

The Department of L&I along with other Commonwealth agencies has a contract with Language Services. The statewide contracts are for all language support services. The contract can be accessed by contacting the procurement officer or purchasing agent to learn how. The process is as simple as writing a Purchase Order against the contract. Even when you are not using the service, a purchase order will ensure we are covered when the need arises.

At this time, the accomplishments are as follows:

- **Department-wide Limited English Proficiency (LEP) Plan.**
- **State Contract for translator and interpreters.**
- **On-going training.**
- **L&I Central Office has hired a Spanish translator/ interpreter.**
- **Department wide services through Language Services Associates.**
- **UC Service Centers and CareerLinks with significant Spanish population have front-end Spanish greeting on the phone system.**
- **The Commonwealth's career assistance website, JobGateway.pa.gov, offers an option to view the site in Spanish.**

Individual program offices and the agency-wide workgroup will continue to work on ensuring delivery of services to individuals with limited English proficiency.

The manner in which and extent to which orientation for registrants, applicants, eligible applicants/registrants, employees, applicants for employment, and members of the public include a discussion of the rights of such persons under WIA section 188 and 29 CFR part 37.

➢ In Pennsylvania's UCSCs, the applicant files for Unemployment Insurance over the telephone. There is no face-to-face orientation. The Unemployment Handbook is mailed to the applicant. When the applicant calls for the initial check, he/she must acknowledge that they received, read and understood the Civil Rights information.

In CareerLinks, if the applicant/claimant registers for work through the Internet only, he/she must acknowledge that they read and understood their Civil Rights before they can complete the registration process. If that individual requires core services, they must physically go to the CareerLink and talk to staff. At that point their rights are explained.

The steps taken to ensure that communications with individuals with disabilities are as effective as communications with others.

➢ Pennsylvania CareerLinks and UCSCs/SESA offices and LWIAs are monitored for their accessibility to individuals with disabilities. Each office has an Americans with Disabilities Act (ADA) self-evaluation document on file. ***(See Attachment D; ADA Self Evaluation)*** Each office has TDD/TTY and Relay capabilities, and has a plan in place for serving the visually

impaired, as well as a plan to provide services to applicants with limited English speaking proficiency skills ***(See: Strategic State Plan Attachment A; IX-Service Delivery& Appendix N)***

The process the State has used and will continue using to develop and communicate policy and conduct training regarding nondiscrimination and equal opportunity.

- The Office of Equal Opportunity will conduct routine Equal Opportunity Compliance Reviews of UC Service Centers/CareerLinks and LWIAs. Through the use of a self-assessment tool, written policies will be reviewed to ensure they are nondiscriminatory (*See Attachment E; Nondiscrimination and Equal Opportunity Self-Evaluation Guide).* Technical Assistance Training will also be provided to UC Service Center/CareerLink Equal Opportunity Liaisons and LWIA EO Officers on non-discrimination policies and procedures ***(See Strategic State Plan Attachment A; VII-Integration of PA CareerLink Service Delivery, and XI-Assurances,).*** In addition, Desk Audits will be conducted on UC Service Centers/CareerLinks to ensure equal opportunity compliance.

  Training will be provided to ensure that Equal Opportunity Officers and members of the recipient's staff (who have been assigned responsibilities for equal opportunity provisions of WIA or this part are aware of and can effectively carry out these responsibilities. All information regarding federal EO conferences or training will be forwarded to local level EO Officers and CareerLink and UCSC EO Liaisons. Training will be provided on a continuous basis, as it becomes available at the federal level. The Office of Equal Opportunity has provided training for local level Equal Opportunity Liaisons.

ELEMENT 3.

Review assurances, job training plans, contracts, and policies and procedures (29 CFR 37.54 (d) (1) (i) and (d) (2) (i), (iii) and (iv))

The State should address how it and its recipients are complying and will continue to comply with requirements of 37.20 and 37.54(d)(1)(I), and (2)(2)(i), (iii) and (IV) regarding the review of assurances, job training plans, contracts and policies and procedures. Additionally, this element should address the procedures the State and its recipients are following and will continue to follow in assessing the ability of grant applicants, if funded or training providers, if declared eligible, to comply with WIA Section 188 and 29 CFR Part 37.

Each grant applicant and training provider seeking eligibility includes in its application for financial assistance under Title 1 of WIA the required EO assurance.

- The Commonwealth of Pennsylvania assures that it will comply with Section 188 of the Workforce Investment Act of 1998, Title VI of the Civil Rights Act of 1964, as amended, Section 504 of the Rehabilitation Act of 1973, as amended, and the Age Discrimination Act of 1972, as amended.

- The Commonwealth of Pennsylvania also assures that it will comply with 29 CFR Part 37 and all other regulations implementing the laws listed above.

- ***See Strategic State Plan Attachment A; XI-Assurances.***

A copy of procedures was developed to review the ability of grant applicants to comply with the nondiscrimination and equal opportunity provisions of the WIA and 29 CFR Part 37.

The assurance is incorporated into each grant, cooperative agreement, contract or other arrangement whereby Federal financial assistance under Title 1 of the WIA is made available.

- ***See Strategic State Plan Attachment A; XI-Assurances.***

Each grant applicant and approved training provider is able to provide programmatic and architectural accessibility as required by subpart C of part 32.

- Each grant applicant and training provider will be monitored through Equal Opportunity Compliance Reviews and Technical Assistance Training. The Equal Opportunity Review consists of assessing on-site structural accessibility, parking for individuals with disabilities, designated restrooms available for persons with disabilities, building accessibility to persons who are mobility impaired and use a wheelchair, furnishings, public telephone, drinking fountains, and elevators. Each office has an Americans with Disabilities Act (ADA) self-evaluation document on file. In addition, the Equal Opportunity Compliance Review Guide for SESA will be used to monitor program accessibility. (***See Strategic State Plan Attachment A; IX-Service Delivery and XI-Assurances***)

- The Office of Equal Opportunity conducts Technical Assistance and Equal Opportunity Compliance Reviews of all Workforce Investment Areas to assure compliance with all laws and regulations. Special emphasis is placed on the accessibility requirements to assure the program or activity, when viewed in its entirety, is readily accessible to qualified individuals with disabilities.

Job training plans, contracts, assurances, and other similar agreements entered into by recipients are both nondiscriminatory and contain the required languages regarding nondiscrimination and equal opportunity.

- The Office of Equal Opportunity will conduct Equal Opportunity Compliance Reviews of CareerLinks, UC Service Centers and LWIAs. The desk audit portion of the EO Review will concentrate on the job plans, assurances and agreements. The **Workforce Investment Streamlined Reporting System (WISPR)** will be used to assist in monitoring Equal Opportunity for CareerLink claimants/applicants seeking services in the CareerLink. For Unemployment Insurance, the Equal Opportunity Summary of Claims Non-monetary Determination and Appeals Data is used to monitor Equal Opportunity for claimants.

- The Office of Equal Opportunity reviews the WIA's job training plans, contracts, and assurances every contract year to ensure that they are nondiscriminatory and contain the required components and language, regarding nondiscrimination and equal opportunity.

State and local-level policy issuances, or issuances from other recipients, do not discriminate either in intent or effect.

- The Secretary of the Department of Labor and Industry issues several policy statements including the "Equal Opportunity Policy Statement" and the "Sexual Harassment Policy Statement" and the "Disability-Related Employment Issues Statement" reaffirming the Department of Labor and Industry's position that the Workforce Investment Areas, CareerLinks, SESAs or other federally funded or assisted programs are prohibited from discrimination against applicants, eligible applicants, claimants, participants, applicants for employment, employees and members of the public. In addition, discrimination is prohibited against individuals with disabilities, vision or hearing impairments and individuals with limited or no English speaking proficiency in admission or access to, opportunity or treatment in employment, in the administration of or in connection with any WIA, CareerLink or SESA program or activity.

- State and local level policy issuances that do not discriminate either in intent or effect and are issued to indicate prohibitions against discrimination are as follows: The Secretary's Policy on Sexual Harassment, Equal Opportunity Policy Statement, "Equal Opportunity is the Law" poster in Spanish & English, Equal Opportunity Guidebook, Handbooks and Civil Rights Statements for registered applicants of SESA offices. ***(See Strategic State Plan Attachment A; VII-Integration of PA CareerLink Service Delivery and XI-Assurances)***

Policies on WIA Title 1 nondiscrimination and/or equal opportunity issues are developed and implemented in a timely manner.

- Policies on WIA Title I nondiscrimination and/or equal opportunity matters are issued and disseminated annually under the signature of the Secretary of the Department of Labor & Industry.

See Strategic State Plan Attachment A; VII-Integration of PA CareerLink Service Delivery,. (Also, see Attachment C; State Policies & Procedures for Equal Opportunity.)

ELEMENT 4.

Universal Access (37.54(d) (1) (vi)

In this element, the State should address how it and its recipients are complying and will continue to comply with the requirements of 29 CFR 37.42 relating to the provision of universal access to programs and activities.

The State has communicated the obligation of recipients (including the LWIAs, One-Stops and other service providers) to make efforts (including outreach) to broaden the composition of the pool of those considered for participation or employment in their programs and activities in an effort to include members of both sexes, various racial and ethnic groups and various age groups, as well as individuals with disabilities.

- "The WIA/CareerLink website provides access anywhere, anytime to employment and training opportunities in Pennsylvania through a unique system of individualized electronic portfolios for both job seekers and employers. As a result, targeted groups such as youth, dislocated workers, veterans, older workers, welfare recipients and persons with disabilities will have access to higher quality comprehensive services." ***(See Strategic State Plan Attachment A; Section IV,; Section IX, and Appendix O)***

- **Demand-Driven Approach**

  As mentioned in section V. E. of Strategic State Plan, the Commonwealth seeks to invest state workforce dollars in Local Workforce Investment Areas for programs that target high-growth, high-demand industries and careers. To remain competitive in the global economy, Pennsylvania must connect workforce development more tightly to the demands of industry. By engaging businesses within the clusters, professionals can combine training needs for multiple firms with similar skill needs and help drive a market-based approach to talent development on a regional basis.

  The specifics of how Pennsylvania is implementing a demand-driven approach have been described elsewhere in the Strategic State Plan. Of particular interest, however, are the steps Pennsylvania has taken to define high-demand occupations. See Appendix D (Definition of High Priority Occupations), which explains this process and a short description of the nine targeted industry clusters. Also see Appendix E (High Priority Occupations by Industry Cluster) for high priority occupations.

Integration of PA CareerLink Services - Apprenticeship and Job Corps

- **Pennsylvania has a partnership with the United States Department of Labor, Bureau of Apprenticeship and Training (BAT) to promote and register apprentice programs and apprentices in the Commonwealth. The BAT provides a field staff to visit apprentice sponsors, and to promote and write apprentice programs. The results are then presented to the Governor-appointed Pennsylvania Apprenticeship and Training Council for its review and registration. Upon registration, programs revert back to the BAT for general administration and maintenance. The BAT staff works with Pennsylvania Department of Labor & Industry, PA CareerLinks, state and Local Workforce Investment Boards, and Youth Councils to encourage and spread information about the advantages of registering apprentices.** ***(See Strategic State Plan A; Section VI)***

The Commonwealth communicates its obligation to LWIA recipients through pamphlets, brochures, and outreach at Job Fairs. Equal Opportunity posters are sent to all CareerLinks, UC Service Centers and LWIAs, and Equal Opportunity Compliance Review packages are given to all EO Liaisons. Technical Assistance is provided to all EO Officers and Liaisons to ensure equity and availability of service to all SESAs and LWIAs.

Recipients have made efforts and will continue their efforts to broaden the composition of applicant, registrant and participant pools.

"As resources of all partners in the WIA/CareerLink system are coordinated and streamlined, the needs of dislocated workers, displaced homemakers, migrant and seasonal farm workers, welfare recipients, women, minorities, veterans, and individuals with multiple barriers (including older individuals, people with limited English speaking ability and individuals with disabilities) will be considered with the accessibility of intensive and training services. Special recruitment and outreach will be conducted to ensure that populations with special needs are informed of the services available in the CareerLink system." ***(See Strategic State Plan Attachment A; Section VI, (c))*** Special recruitment and outreach will be done by advertising in local newspapers, contacting minority organizations and news media, etc.

- Recruitment advertisements for employment with various employers are frequently on radio; approximately 5 job fairs a year for local CareerLinks. Newspaper advertisements are used for major employers. Employers can post jobs on the Internet any time of day, seven days a week. Similarly, applicants/claimants can access jobs on the Internet any time of day, seven days a week. CareerLinks in Pennsylvania are now open longer to accommodate the public-some are now open until 7 p.m. in the evening and sometimes on weekends. CareerLinks in Pennsylvania have implemented One-Stop Centers that include an abundance of services. In addition to the above mentioned services, the WIA/CareerLink offers:

    - Assistance with career planning
    - Counseling services
    - Veteran services
    - Internet exploration of occupations, careers and employment
    - Referral to community based organizations
    - State Civil Service announcements
    - Federal Civil Service information
    - Job search Workshops

The State monitors and evaluates the success of recipient efforts to broaden the composition of applicant, registrant and participant pools.

- Monitoring and statistical assessment procedure: The Office of Equal Opportunity conducts routine Technical Assistance and Equal Opportunity Compliance Reviews on UC Service Centers/CareerLinks throughout Pennsylvania ***(See Attachment E; Non Discrimination and Equal Opportunity Self Evaluation Guide).*** The Commonwealth utilizes Workforce Investment Streamlined Reporting System (WISPR) as the data collection system (formerly known as the ETA 9002A Report) to ensure that all applicants/registrants utilizing the CareerLink are given a fair chance for referral, placement, job development, testing, and counseling activities within any given CareerLink in Pennsylvania. The report breaks down the services by race, sex, disability, as well as veteran's status and Migrant/Seasonal Farm workers status. The Workforce Investment Streamlined Reporting System (WISPR) flags disparities that may occur in the CareerLinks and it can identify the station and desk number of the person where the disparity exists. The Summary of Claims, Nonmonetary Determinations and Appeals Data is used to look for disparities in Unemployment Insurance (UI). This data shows the number of Initial Claims, New Claims and Additional Claims per office, as well as determinations that are valid or invalid by race, sex, age and disability. The targeted groups are all customers of both Unemployment Insurance and CareerLinks.

- During an Equal Opportunity Compliance Review, a sampling of advertisements is reviewed to assure that outreach is done to all groups to be considered for participation and employment in WIA Title - I federally funded programs and activities.

ELEMENT 5.

Compliance with Section 504 of the Rehabilitation Act of 1973, as amended and 29 CFR part 37 (29 CFR 37.54 (d) (v))

In this element, the State should address how it and its recipients are complying and will continue to comply with the requirements of the disability related requirement of WIA section 188; Section 504 of the Rehabilitation Act of 1973, as amended; and their implementing regulations, including but not limited to 29 CFR 37.7, 37.8, and 37.9 and Subparts B and C of 29 CFR Part 32.

Meet their obligation not to discriminate on the basis of disability. (29. CFR 32.12 (a), 32.36, and 37.7.)

- The Department of Labor and Industry mandates, through the Equal Opportunity Policy Statement and the WIA Policies and Procedures, that WIA funded or assisted programs are prohibited from discriminating against individuals with disabilities, vision or hearing impairments and individuals with limited or no English speaking proficiency in admission or access to, opportunity or treatment in, employment in the administration of, or in connection with the WIA program or activity.

- All individuals with disabilities are made aware of their rights, just as any other job seeker. The "Equal Opportunity is the Law" (English and Spanish versions) poster is posted in all UCSCs/CareerLinks and LWIAs, included in handouts for Unemployment and CareerLinks Civil Rights information on the Internet, and referenced in the Secretary's Policy on Equal Opportunity **(See Attachment A; Strategic State Plan Assurances *XI*).**

Provide reasonable accommodation for individuals with disabilities. (32.13 and 37.8)
Provide reasonable modification of policies, practices and procedures as required. (See 37.8)

- Reasonable accommodations must be made for the known physical or mental limitations of otherwise qualified applicants or employees with disabilities, unless it can be shown that the accommodation would impose an undue hardship on the operation of the program.

- Examples of some of the reasonable accommodations and modifications provided by the state are as follows:

  Ensuring that all CareerLink/UCSC and LWIA sites are in compliance with Americans with Disabilities Act accessibility guidelines. The Office of Equal Opportunity, Americans with Disabilities Act, Section 504 of the Rehabilitation Act of 1973, and the Equal Opportunity Specialist has worked with CareerLinks to ensure providing of technology-assisted hardware and software and facilitated training for staff to make the delivery system totally accessible to individuals with disabilities.

  Commonwealth Workforce Development Systems (CWDS) has replaced the entire computer system for the visually impaired and is accessible for all CareerLink services.

  The Office of Vocational Rehabilitation, with its Bureau of Blindness and Visual Services and the Office for the Deaf and Hard of Hearing, will be CareerLink partners at all primary sites.

  All CareerLink and LWIA sites will have an awareness of appropriate community resources to address special needs of customers. Recipients are aware of their obligations to provide reasonable accommodations to qualified individuals with disabilities who are applicants, registrants, and/or eligible applicants unless the accommodation would cause undue hardship. CareerLink sites also have telecommunication access for individuals who are deaf and/or hard of hearing ***(See Strategic State Plan Attachment A; Section IX).***

The LWIA will provide a written statement of reasons for refusing to provide accommodations/modifications to the individual or individuals who requested the accommodations.

If a requested accommodation would result in undue hardship, the LWIA will take any other action that would not result in such a hardship, but would nevertheless ensure that, to the maximum extent possible, individuals with disabilities receive the aid, benefits, services, training, or employment provided by the LWIA.

The LWIA provider will, within reason, modify its facility policies, practices or procedures to avoid discrimination against individuals with disabilities unless the modifications would primarily affect the basis of the service, program or activity.

Provide architectural accessibility and programmatic accessibility

- Each facility or part of a facility constructed by, on behalf of, or for the use of a recipient shall be designed and constructed in such a manner that the facility or part of the facility is readily accessible to and usable by qualified disabled individuals.

- Each facility or part of a facility which is altered by, on behalf of, or for the use of a recipient in a manner that affects or could affect the ability to use the facility or part of the facility shall, to the maximum extent feasible, be altered in such a manner that the altered portion of the facility is readily accessible to and usable by qualified individuals with disabilities.

- The Office of Equal Opportunity conducts equal opportunity compliance reviews, which includes a review of the CareerLinks/UC Service Center/LWIAs completed self-evaluation - ADA survey. This survey facilitates evaluation of the external and internal structural accessibility of facilities. Where inaccessibility is found, corrective action plans must be submitted to the Office of Equal Opportunity, with timeframes for implementation. Follow-up is done to ensure that the problem is corrected.

- OEO utilizes standards for architectural accessibility, design, construction, or alteration standards for physical accessibility prescribed by **Title III of the Americans with Disabilities Act (ADA) under the Americans with Disabilities Act Accessibility Guidelines (ADAAG)** to assess accessibility during on-site reviews.

- Recipients must comply with the architectural accessibility standards whether or not an individual with a disability has requested a reasonable accommodation (32.27).

- An Equal Opportunity Policy Statement signed by the Secretary of Labor and Industry has been posted in CareerLinks/UC Service Centers/LWIAs and reiterates the fact that equal opportunity, as enshrined in the United States Constitution, is available to all citizens of the Commonwealth.

- State Employment Security Agencies and Local Workforce Investment Areas are prohibited from discriminating on the grounds of race, color, religion, sex (sexual harassment is a form of discrimination), national origin, age, disability, political affiliation or belief, **and for beneficiaries only, citizenship or participation in any WIA Title I – financially assisted program or activity**.

- The Office of Equal Opportunity addresses programmatic accessibility during Technical Assistance visits conducted, during regional training events, and through policy statement issuances to recipients and Equal Opportunity Officers/Liaisons ***(See Attachment E; -Non Discrimination and Equal Opportunity Self Evaluation Guide for SESA/WIA).***

- LWIAs will not deny the benefits of programs, activities or services to individuals with disabilities because of inaccessible facilities. OEO will assure that all aspects of WIA programs or activities, when viewed in their entirety, are readily accessible to and usable by individuals with disabilities. Although CareerLinks, UC Service Centers and WIAs are not required to make every facility or every part of an existing facility accessible, arrangements will be made, when necessary, to ensure full participation by qualified individuals with disabilities. However, if a particular program is available in only one location, that site will be made accessible or the program will be made available at an alternative accessible site or sites.

Provide for and adhere to a schedule to evaluate job qualifications to ensure that the qualifications do not discriminate on the basis of disability (32.14)

- The "Equal Opportunity is the Law" poster and the Equal Opportunity Policy Statement are posted in all CareerLinks, UCSCs, and LWIAs. These statements ensure that individuals because of race, color, religion, sex, national origin, age, disability, or political affiliation are not discriminated against. The Equal Opportunity Specialist will monitor Job Orders posted by employers, to evaluate all essential functions and skill requirements, and to ensure that language stated therein will not cause discrimination against individuals with disabilities and that they have equal opportunities for referrals. The **Workforce Investment Streamlined Reporting System (WISPR)** along with desk audits will look for disparity in referrals and placements of individuals with disabilities. ***(See Attachment A; Strategic State Plan; Section IX-Assurances)***

- Employment practices and employment related training program participation must be evaluated and a schedule developed and adhered to for reviewing the appropriateness of all job qualifications. In instances where individuals with disabilities are excluded because of their disability, the job qualifications must be related to job performance and be consistent with business necessity and safe performance.

- Whenever a recipient applies job qualifications in the selection of applicants, employees or participants for employment or training or other change in employment status such as promotion, demotion or training, which could exclude individuals with disabilities because of their disability, the qualifications shall be related to the specific job or jobs for which the individual is being considered and shall be consistent with business necessity and safe performance.

Limit pre-employment/employment medical inquiries to those permitted by and in accordance with WIA Section 188, Section 504 and the Americans with Disabilities Act of 1990 and their implementing regulations.

- The Office of Equal Opportunity will provide technical assistance training to EO Liaisons of UCSCs and CareerLinks and LWIA EO Officers. The Liaisons will be made aware that recipients may not conduct pre-employment medical examinations or make pre-employment inquiries of an applicant for employment or training regarding a disability or the nature or severity of a disability. A recipient may make pre-employment inquiry into an applicant's ability to perform job-related functions.

- Pre-employment medical examinations may not be required, but may be a condition of a job offer based on the results of a medical examination conducted prior to an individual's entrance on duty if:
    - All entering employees in the same job category, regardless of disability status, are required to take the same medical examination;
    - The results of the medical examination are not used to discriminate on the basis of disability; and
    - All information about the individuals' medical condition and medical history is maintained and treated as confidential medical information.

CareerLinks are aware that disclosure of disability status is voluntary and that information is for record keeping purposes only. Otherwise, such data must be maintained as confidential and only provided on a 'need-to-know' basis.

Ensure the confidentiality of medical information provided by registrants, applicants, eligible applicants/registrants, participants, employees, and applicants for employment.

- EO Liaisons and Officers of UC Service Centers/CareerLinks and LWIAs, will be made aware that results of medical examinations shall be transmitted to the employing official, only after a conditional decision to make a job offer has been made. Information obtained regarding the applicant's medical condition or history shall be collected and maintained on separate forms that shall be accorded confidentiality as medical records, except that employing officials may obtain the information after making a conditional decision to make a job offer to the applicant or the applicant was placed conditionally in a job pool or on an eligibility list. The only individuals in the CareerLink that have access to confidential medical information are employees who have been given computer access through Department of Labor & Industry Security, or through the Workforce Investment Board. ***(See Attachment A; Strategic State Plan; Section IX-Assurances***

- Pennsylvania's Strategic State Plan (Section IX-Assurances, page 119) assures that the Commonwealth of Pennsylvania will comply with the confidentiality requirements of WIA.

Further, all information on an individual's medical condition and medical history is maintained and treated as confidential medical information.

Administer the WIA Title I- financially assisted programs and activities so that each individual with a disability participates in the most integrated setting appropriate to that individual (See 37.7 (d).)

- The Department of Labor and Industry assures that qualified individuals with disabilities must be provided an equally effective opportunity to participate in or benefit from the aid, benefit, service, employment or training provided by recipients of federal financial assistance under WIA Title I. Equal participation of qualified individuals with disabilities through inclusion or integration is one of the primary objectives of program accessibility under 29 CFR Part 37 at 37.7 (d).

  The Department of Labor and Industry assures that appropriate steps will be taken to ensure that communications with beneficiaries, registrants, applicants, eligible applicants/registrants, participants, applicants for employment, employees, and members of the public who are individuals with disabilities, are as effective as communications with others.

- Auxiliary aids and services to ensure effective communications, where necessary, will be made available by WIA - Title I federally assisted programs.

- PA Workforce/CareerLink has developed the document, "Accessibility Guidelines for Effective Communication for People with Disabilities".

- UCSCs provide accessible telephone usage, TDD & TTY, along with Telephone Language Line. Individuals who do not have a telephone or individuals with disabilities that will not permit phone usage, may use mail claims, or receive assistance from nearby CareerLinks. Appropriate auxiliary aids or services, where necessary, will afford individuals with disabilities an equal opportunity to participate in, and enjoy the benefits of WIA Title I financially assisted programs or activities. The Office of Vocational Rehabilitation, the Bureau of Blindness and Visual Services and the Office for the Deaf and Hard of Hearing, will be maintained as CareerLink partners at all primary sites. However, individuals with disabilities will be placed in training environments in the most integrated setting possible and will not be referred to programs that provide services exclusively to persons with disabilities as long as the person can perform in the program or on the job.

Are able to communicate with persons with disabilities as effectively as with others.

- When an auxiliary aid or service is required, the individual with the disability must be given the opportunity to request the aid(s) and service(s) of his or her choice and that choice must be given "primary consideration." Consulting with the individual with the disability is important because that individual is in the best position to determine an effective aid or service.

- PA CareerLinks provide auxiliary aids or services for individuals with hearing impairments to include qualified interpreters, note takers, computer assisted services, telephone headset amplifiers, and telecommunication devices for deaf persons (TDD/TTYs).

- On March 2, 2010, Pennsylvania's Department of Labor & Industry, Office of UC Benefits began providing videophone service for deaf UI Claimants. Individuals who are deaf may use the videophone service to file claims for unemployment benefits, ask questions about their claims or get information about Unemployment Insurance (UI) programs.

- **How it Works**
  A stand-alone high speed Internet connection, a personal computer with "Purple" (software similar to Skype-type of communication) and a camera, a UI Interviewer and a state-registered interpreter are housed in a private cubicle in a low-traffic area in a service center.
  A claimant who uses ASL calls the videophone number. The ASL interpreter and UI Interviewer answer the incoming call from the claimant. The interpreter will interpret between the claimant using ASL and the Interviewer using English. As a result, the Interviewer can effectively communicate with the claimant and provide immediate UI services. Also, the process can be reversed with the Interviewer calling the claimant.
  Claims taking and UI services provided to the claimant via videophone are easily and quickly completed. This real-time, three-way communication enables the participants to be visual: they can refer to forms and show specific places on forms; they can write notes on a large pad if they have problems communicating; they can visually stop the communication if it becomes difficult to understand. The Interviewer can ask any necessary questions and answer questions from the claimant, thus, saving time.
  The videophone has the capability of "sign mail" or "voicemail." Claimants can leave sign mail on this phone, and the Interviewer returns calls during times when not receiving inbound calls. When not manned, the videophone has an ASL sign mail message on it, alerting claimants of the hours of operation, to leave a message for a call back, or to call the toll free service center number using Video Relay Services (VRS) for immediate needs.

- Auxiliary aids or services for individuals with vision impairments include readers, audio recordings, brailed materials, in partnership with the Office of Vocational Rehabilitation and large print materials.

- The international symbol for accessibility should be used at each primary entrance of an accessible facility and appropriate signage must also direct individuals with disabilities to accessible secondary facilities, i.e. restrooms, lunchrooms, water fountains and telephones.

  WIA Title I financially assisted programs will not deny the benefits of programs, activities or services to individuals with disabilities because of inaccessible facilities. Local Workforce Investment Areas/CareerLinks/UC Service Centers must assure that all aspects of the program or activity, when viewed in its entirety, are readily accessible to and usable by individuals with disabilities. While every facility or every part of an existing facility may not be accessible, arrangements will be made to ensure full participation by individuals with disabilities. ***(See Attachment A; Strategic State Plan; Section IX-Assurances)***

ELEMENT 6.

Data and Information Collection Maintenance (37.54(d) (1) (IV) and (VI)

The State should address how it and its recipients are complying and will continue to comply with the requirements of 29 CFR 37.37 - 37.41, related to data and information collection and maintenance. The State must ensure that a data and information collection and maintenance system for its State programs is established and maintained.
(See 29 CFR 37.53.)

Recipients collect and maintain for a minimum of three years, records on applicants, registrants, eligible applicants/registrants, participants, terminees, employees and applicants for employment.

- PA CareerLinks/UC Service Centers/LWIAs will collect data and maintain records necessary to determine compliance with the equal opportunity provisions of (29 CFR 37 at 37.37 (b) (2)). Records maintained will include, but are not necessarily limited to, records on applicants, registrants, eligible applicants/registrants, participants, terminees, employees, and applicants for employment.

- To ensure adherence to (37.37 (b) (2)), Equal Opportunity Compliance Reviews will also be conducted. All EO data on applicants, registrants, participants, terminees, etc., will be maintained for at least three (3) years. Personal data regarding complaints and grievances must be kept in a locked file.

Recipients record the race/ethnicity, sex, age, and, where known, disability status of each applicant, registrant, eligible applicant/registrant, participant, terminee, employee, and applicant for employment.

- Recipients will collect various data at the intake stage. Applications, whether in UC Service Centers, CareerLinks or LWIAs, will ask for Social Security number, birth date, race, sex, and disability.

- In addition, the race/ethnicity, sex, age, and where known, disability status of every applicant, registrant, eligible applicant/registrant, participant, terminee, applicant for employment, and employee will also be collected. (29 CFR 37.37 (b)(2))

Recipients treat records in a manner that ensures their confidentiality, particularly as it relates to medical information.

- All information collected, including records containing medical information, will be stored in a manner that ensures confidentiality, and will be used for the purpose of record keeping and reporting, and determining eligibility, when appropriate for WIA Title I-financially assisted programs or activities.

- Technical Assistance Training for all SESA Equal Opportunity Liaisons and LWIAs will explain proper procedures for maintaining records on complaints, applicants, confidentiality, and when to ask for medical information. *(See MOA Element #5 – "Ensure the confidentiality of medical information provided by registrants, applicants, eligible applicants/registrants, participants, employees, and applicants for employment" and* ***Strategic A; State Plan; Section IX-Assurances)***

Recipients maintain a log of complaints filed that allege discrimination on one or more of the basis listed in Section 188 of WIA.

- WIA/CareerLinks/UC Service Centers will maintain and submit to DOL's Civil Rights Center (CRC), upon request, a complaint log containing pertinent information about discrimination complaints. The log will include:

    - Name and address of the complainant
    - A description of the complaint
    - The date the complaint was filed
    - The disposition and date of disposition of the complaint
    - Other pertinent information

  All information that could lead to the identification of a particular individual who filed a complaint will be kept confidential.

Grant applicants and recipients notify the Director of CRC of administrative enforcement and lawsuits.

- The Department of Labor and Industry assures that information about any administrative enforcement actions or lawsuits that allege discrimination on any protected basis filed against WIA grant applicants or recipients within the Commonwealth of PA will be promptly reported to the Director of CRC.

ELEMENT 7.

Monitor recipients for compliance (37.54(d) (2) (ii)).

The State should address how it and its recipients are complying and will continue to comply with the requirements of 29 CFR 37.54 (d) (1) (iii). The State is required to establish procedures to monitor periodically all aspects of the recipient's compliance with Section 188 of WIA and 29 CFR Part 37.

Assurances (See 29 CFR 37.20 through 37.22.)

- The Commonwealth of Pennsylvania assures full compliance with the nondiscrimination and equal opportunity provisions of the following laws:

  - Section 188 of the Workforce Investment Act 1998
  - Title VI of the Civil Rights Act of 1964, as amended
  - Section 504 of the Rehabilitation Act of 1973, as amended
  - Age Discrimination Act of 1975, as amended
  - Title IX of the Education Amendments of 1972, as amended

- ***See Attachment A; Strategic State Plan; Section IX-Assurances, page 119***

Equal Opportunity Officers (See 37.23-37.28.)

- The Commonwealth of Pennsylvania assures that an Equal Opportunity Officer has been appointed/designated for all service providers. The Equal Opportunity Officer is a senior-level employee of the LWIA.

- The EO Officer is responsible for coordinating recipient's obligations under 29 CFR, part 37 at 37.25. (See MOA Element #1)

Notice and Communication (See 37.29-37.36.)

The LWIA/CareerLinks/UC Service Centers will provide initial and continuing notice that it does not discriminate on any prohibited ground. This notice will be provided to registrants, applicants, and eligible applicants/registrants, participants, applicants for employment and employees, unions or professional organizations that hold collective bargaining or professional agreements with the recipients, sub-recipients that receive WIA Title I funds from the recipient, and members of the public, including those with impaired vision or hearing.

The "Equal Opportunity is the Law" poster will be distributed to all LWIA Section 188 Title I federally assisted programs and will be posted in highly visible areas throughout the WIA. The "Equal Opportunity is the Law" language will be disseminated in internal memoranda and distributed to participants/applicants in written and/or electronic communications. It will be included in handbooks and/or manuals and in alternate formats to participants with vision impairments.

- Recruitment brochures and other materials that are distributed or communicated in written and/or oral form will indicate that the LWIA is an "Equal Opportunity Employer/ Program and auxiliary aids and services are available upon request to individuals with disabilities." Materials will include the TDD/TTY telephone number or relay service used by the recipient.

- All LWIA Title I financially assisted programs in Pennsylvania have a system in place where participants/applicants can receive services in languages other than English. This also includes the 'Equal Opportunity is the Law" posters, handbooks, brochures, and other written or electronic communications.

- During all presentations to orient new participants, new employees and/or the general public, civil rights requirements will be discussed, including the right to file a complaint of discrimination with the recipient or the Director of the Civil Rights Center. (See MOA ELEMENT #2)

Data and Information Collection and Maintenance (See 37.37-37.41.)

- **For Wagner-Peyser/CareerLinks in 2005, due to Pennsylvania's pilot of Common Measures performance, USDOL granted a waiver to Pennsylvania, relieving the Commonwealth of reporting performance via the ETA 9002/Vets 200 for PY05 and PY06. USDOL anticipated that Common Measures allow the tracking of a job seeker across all workforce programs, from the time they enter the workforce system until they exit. Previously, each workforce partner had their own reporting requirements, which sometimes caused conflicts in providing service.**

  Pennsylvania's program and technical staff worked with USDOL to develop an acceptable report format for Common Measures. The resulting required reports under Common Measures are the Standardized Quarterly Performance Report, or 9132 and 9133 (Vets), the Workforce Investment Streamlined Reporting System (WISPR), and the WIA annual report (ETA 9091).

  The 9132 report provides the numbers across all programs of the one-stop system, broken out by funding streams. It contains demographic breakouts, along with performance percentage accomplishments. The 9133 (Vets) provide similar breakouts across the various veteran categories.

  The WISPR is commonly referred to as a "data dump". Pennsylvania transmits a data file to USDOL for each job seeker served. This permits USDOL to pull various reports as needed, eliminating the need for the extensive reporting of the ETA 9002/Vets 200.

- WIA recipients, including CareerLinks/UC Service Centers are required to collect data and maintain records necessary to determine compliance with the equal opportunity provisions of the WIA. Such records must include data on applicants, registrants, eligible applicants/registrants, participants, terminees, employees, and applicants for employment.

- Each recipient records the race/ethnicity, sex, age, and, where known, disability status, of every applicant, registrant, eligible applicant/registrant, participant, terminee, applicant for employment, and employee.

- WIA recipients also maintain a log of complaints filed with it that allege discrimination on the ground(s) of race, color, religion, sex, national origin, age, disability, political affiliation or belief, citizenship and/or participation in a WIA Title I federally assisted program or activity. The log includes the name and address of the complainant; the grounds for the complaint; a description of the complaint; the date the complaint was filed; the disposition of the complaint; and other pertinent information. Information that could lead to identification of a particular individual who filed a complaint will be kept confidential. (29 CFR 37.37)

- In addition, each grant applicant and recipient will notify the Director of the Civil Rights Center when administrative enforcement actions or lawsuits are filed against it alleging discrimination.

This notification will include the names of the parties to the action or lawsuit, the forum in which each case was filed, and the relevant case numbers. (29 CFR 37.38)

- Each recipient will maintain the following records for a period of three years from the close of the applicable program year: The records of applicants, registrants, eligible applicants/registrants, participants, terminees, employees, and applicants for employment. Records regarding complaints and actions taken will be kept for three years from the date of resolution of the complaint. (29 CFR 37.39)

- The identity of any individual who furnishes information relating to, or assisting in an investigation or compliance review including the identity of any individual, who files a complaint, will be kept confidential to the extent possible. When an individual's identity must be disclosed, he/she will be protected from retaliation, when possible (29 CFR 37.41). See MOA ELEMENT #6

Universal Access (See 37.42.)

Recipients will take appropriate steps to ensure they are providing universal access to their WIA Title I-federally funded program and activities. Such efforts include, but are not limited to advertising programs and/or activities in media that specifically target various populations, sending notices of openings to community-based organizations that serve various populations and extending outreach efforts to include schools or community service groups serving individuals with disabilities (29 CFR 37.42). See MOA ELEMENT #4

Complaint Processing Procedures (See 37.70-37.80.)

- See MOA ELEMENT #8

- The Commonwealth of PA assures that its WIA programs will operate in a manner that prohibits discrimination against all individuals in the United States on the basis of race, color, religion, sex, national origin, age, disability, political affiliation or belief, and against beneficiaries on the basis of either citizenship/status as a lawfully admitted immigrant authorized to work in the United States or participation in any WIA Title I - financially assisted program or activity. In addition, LWIAs/CareerLinks and UC Service Centers are aware of their obligation to comply with Title VI of the Civil Rights Act of 1964 as amended, Section 504 of the Rehabilitation Act of 1973, as amended, the Age Discrimination Act of 1975, as amended, Title IX of the Education Amendments of 1972, as amended, and 29 CFR Part 37.

  Additionally, a copy of 29 CFR Part 37, "Implementation of the Nondiscrimination and Equal Opportunity Provisions of the Workforce Investment Act of 1998: Final Rule" has been issued to all WIB staff contacts to be disseminated to their designated EO Officers/Liaisons.

EO evaluation/monitoring of applicants for and recipients of WIA Title I financial assistance (including monitoring assurances and programmatic and architectural accessibility).

- The Office of Equal Opportunity will conduct regularly scheduled Equal Opportunity Compliance Reviews of each CareerLink/UC Service Center. The Compliance Review will assess the adequacy of the following:

    1. Designation of the Equal Opportunity Liaison
    2. Posters, Notices and Communication
    3. Data, and Information Collection and Maintenance
    4. Accessibility of Services, Universal Access and Structural Accessibility
    5. Complaint Processing Procedures

- Monitoring is a review process used to track program performance, evaluate placement and training systems, and ensure compliance with civil rights laws. It is also a means by which training needs, technical assistance needs, as well as the need for new or revised policies and procedures, or guidelines, can be determined.

- When assessing the EO compliance status of WIA Title I-federally funded programs or activities, the following areas will be reviewed at the LWIA level:

    - Adequacy of EO/non-discrimination and sexual harassment policy dissemination;
    - Adequacy of EO Record Keeping procedures;
    - Adequacy of complaint procedures;
    - Accessibility of program and structure, to individuals with disabilities and persons of limited English speaking ability;
    - Participant and staff advisement of their civil rights under federal law and;
    - Prominent display of EO posters in English and Spanish wherever applicant/participant services are provided, including training facilities and worksite locations, where feasible.

- When a LWIA is selected for an EO Compliance Review, the following occurs:

    1. A notification of review is sent out along with an Information Request Form and Pennsylvania Non-Discrimination and Equal Opportunity Self Evaluation Guide (NEOSEG) (*See Attachment E: PA NEOSEG*),to be completed and returned to the Office of Equal Opportunity within 30 days. Any supporting documentation required must be included.

    2. The most recent quarterly EO report is requested for the program selected for review and a desk review is conducted of the services being provided.

    3. The appropriateness and adequacy of each component is determined by phone interviews and a review of the information received in the NEOSEG and supporting documentation.

    4. Findings are communicated in writing, which include suggested corrective actions and time frames for implementation.

5. When the Office of Equal Opportunity receives the required corrective action plan, a letter of compliance is issued if actions are acceptable. If actions are not acceptable, a letter of non-compliance is issued and further corrective action is recommended/requested.

- The Office of Equal Opportunity and the Equal Opportunity Officer have responsibility for conducting EO Compliance Reviews within Local Workforce Areas. The narrative report will provide the names, title and organization of the person/persons conducting the review.

- LWIAs are selected for EO compliance reviews at random or if there are complaints against the LWIA, or if disparities are noted on the EEO quarterly reports.

Sanctions and corrective actions for violations noted by a recipient during its monitoring reviews.

- When an Equal Opportunity Compliance review results in deficiencies or noncompliance that cannot be resolved or corrected on a voluntary basis, the Equal Opportunity Specialist at the State level provides technical assistance.

- After all attempts to provide assistance and correction of deficiencies fail, the imposition of sanctions will be considered. (See MOA ELEMENT #9)

Policy development, communication, and training.

- See SESA policy and procedures and MOA ELEMENT #2

- Training for LWIAs on the MOA has been conducted and technical assistance will be offered on an on-going basis, or as requested.

Conducting analyses, by race/ethnicity and sex, of program and employment activity, including but not limited to rates of application, placement, and termination, to determine if significant differences exist.

- The Equal Opportunity Compliance Review consists partly of desk audits, which include Workforce Investment Streamlined Reporting System (WISPR). This tool does include the Four-Fifths rule -Department of Labor Regulations 41 CFR.60 Employee Selection Guidelines. A selection rate for any racial, ethnic, or sex group that is less than four-fifths (or 80 percent) of the rate for the group with the highest rate will generally be regarded as evidence of adverse impact. This tool is used during Equal Opportunity Compliance Reviews.

- The EO Compliance Review also addresses Data & Information Collection and Maintenance - Workforce Investment Streamlined Reporting System (WISPR) categorizes individuals by race, sex, disability, etc.

- The EO Compliance Review addresses monitoring assurances and program and physical accessibility in CareerLinks/UC Service Centers.

- The Physical and Program Access Self-Assessment portion of the Compliance Review looks, in great detail, at assurances and inspects program and physical accessibility.

- Refer to Element #6.

Follow-up monitoring to determine the cause of any such differences, through the analysis of the records of individual registrants, applicants, eligible applicants/registrants, employees and applicants for employment, interviews, and other appropriate techniques.

- See above narrative that includes PA Workforce Investment Streamlined Reporting System (WISPR) and 80% rule.

- When disparities exist or areas in question are deficient in some manner, an on-site compliance review is conducted to further determine cause for the differences that exist and corrective measures are promulgated.

The procedure for reviewing the recipient's policies and procedures to ensure they do not violate the prohibitions contained in 37.5 through 37.10.

- The Non-Discrimination and Equal Opportunity Self-Assessment Guide for LWIAs, CareerLinks/UC Service Centers is a tool used to review the recipient's policies and procedures to ensure they do not violate the prohibitions contained in 37.5 through 37.10.

The written reports prepared for each review, which, among other things, provide that results will be made available to the recipient(s) for review.

- A report of findings after each review is forwarded to the Recipient, UC Service Center, CareerLink/LWIA, as applicable.

The involvement of the State-and local-level EO Officer(s) in conducting reviews. Where EO monitoring is carried out by individuals other than the State or local-level EO Officer, the names, titles, and organizations of those persons are provided.

- The State, with the assistance of the LWIA EO Officer, will be/are responsible for conducting reviews.

- All CareerLinks/UC Service Centers have been provided with a synopsis of all applicable and referenced laws necessary to ensure EO Compliance. In addition, technical assistance was provided to each office prior to conducting compliance reviews. During those visits, the compliance review process was explained to the EO Liaison, Manager and Complaint Officer. The Compliance Review instrument was developed to assess all nine (9) elements of the MOA.

The procedure for determining which recipients are to be reviewed, the frequency of reviews of recipients, and the number of recipients to be reviewed per year.

- LWIAs will be reviewed every three years, or seven per year. Eleven (11) WIAs will be selected yearly for technical assistance.

ELEMENT 8

Complaint Processing Procedures

The State should address how it and its recipients are complying and will continue to comply with the requirements of 37.76-37.79 regarding complaint-processing procedures.

Narrative

The Office of Equal Opportunity (OEO) in the Department of Labor & Industry, has designated responsibility for the development and implementation of procedures for processing complaints alleging violations of the nondiscrimination and equal opportunity provisions in Section 188 of the Workforce Investment Act (WIA) and the Department of Labor's regulations, 29 CFR Part 37. Section 188 of WIA prohibits discrimination on the basis of race, color, religion, sex, national origin, age, disability, political affiliation or belief in both participation and employment; and against any beneficiary of programs financially assisted under Title I of the Workforce Investment Act of 1998 (WIA), on the basis of the beneficiary's citizenship/status as a lawfully admitted immigrant authorized to work in the United States, or his or her participation in any WIA Title I-financially assisted program or activity. The nondiscrimination regulations of WIA prohibit discrimination in all aspects of the administration, management and operation of WIA Title I financially assisted programs or activities.

The OEO has developed and adopted procedures for processing complaints alleging violations of the equal opportunity and nondiscrimination provisions of WIA Title I assisted programs and/or activities. All recipients of WIA Title I financially assisted programs or activities will be required to comply with this procedure as provided.

For purposes of WIA, the term recipient is defined, to include the Governor, as:

(1) State level agencies that administer, or are financed in whole or in part, with WIA Title I funds;

(2) State Employment Security Agencies;

(3) State and Local Workforce Investment Boards;

(4) LWIA Grant recipients;

(5) One-Stop Operators;

(6) Service providers, including eligible training providers;

(7) On-the-Job Training (OJT) employers;

(8) Job Corps Contractors and Center Operators, excluding the operators of federally operated Job Corps Centers;

(9) Job Corps national training contractors;

(10) Outreach and admissions agencies, including Job Corps contractors that perform these functions;

(11) Placement agencies, including Job Corps contractors that perform these functions; and

(12) Other National Program recipients; and

(13) One Stop Partners, to the extent that they participate in the One Stop system.

Complaints may be filed by:

- ✔ Applicants/registrants for aid, benefits, services or training
- ✔ Eligible applicants/registrants
- ✔ Participants
- ✔ Employees
- ✔ Applicants for employment
- ✔ Service providers (the organization involved is one, which may be attributed a racial, national origin or other characteristic entitled to protection under WIA).
- ✔ Eligible service providers

Complaint forms for filing allegations of discrimination at the local, state and federal levels can be obtained from the EO Liaison in the CareerLinks, the Local WIA EO Officer, the Office of Equal Opportunity, or directly from CRC. Complaints must be filed within 180-days from the date of the alleged occurrence of discrimination. Complaints filed after the 180-day time period will be forwarded to CRC. The Director of CRC, for good cause shown, may extend the filing time beyond 180 days.

Individuals, specific classes of individuals, or authorized representatives may file complaints/allegations of discrimination regarding CareerLink issues with the Equal Opportunity Liaison in the CareerLink who forwards them directly to the State Equal Opportunity Officer.

Individuals, specific classes of individuals, or authorized representatives may file complaints/allegations of discrimination about LWIA programs or services with the Local Workforce Investment Area's Equal Opportunity Officer, or directly with the State Equal Opportunity Officer. Complainants are also made aware of their right to file allegations directly with the USDOL Civil Rights Center (CRC).

NOTE: Complaints/allegations do not have to be submitted on the prescribed complaint form in order for them to be considered valid complaints or allegations. Discrimination complaints may be submitted to:

Local Workforce Investment Area Equal Opportunity Officer
or
Ms. Rhonda D. Ross, Director, Office of Equal Opportunity
Department of Labor & Industry
Room 1402, Labor & Industry Building
651 Boas St
Harrisburg, PA 17121
Toll Free 1-800-622-5422
TDD/TTY 1-800-654-5984 or PA Relay 711

or

Director, Civil Rights Center
U.S. Department of Labor
200 Constitution Avenue, NW
Room N-4123
Washington, DC 20210
(202) 219-7026
TDD (202) 219-7003

Complaints filed by the complainant or his/her authorized representative must be filed in writing and must contain the complainant's and respondent's name and address, date alleged incident of discrimination occurred, a description of the allegations with enough detail to allow a determination by the Civil Rights Center (CRC) or Department of Labor & Industry about jurisdiction over the complaint, whether or not the complaint was filed in a timely manner, apparent merit, and, if true, whether the allegations would violate any of the nondiscrimination and equal opportunity provisions of WIA, and the complainant's or his/her authorized representative's signature.

Procedures for Complaint Processing at the Local Workforce Investment Area Equal Opportunity Officer Level

Upon notification of a discrimination complaint, the LWIA EO Officer must inform the complainant of their right to file a complaint and have it investigated at the local, state or federal level. All complaints filed with the LWIA Equal Opportunity Officer must be immediately reported to the EO Officer in the Department of Labor & Industry.

If the complainant elects to attempt resolution at the local level, the LWIA EO Officer, based on consultation with the State OEO, will conduct fact-finding/investigation at the local level in consonance with procedures outlined in the WIA.

The LWIA Equal Opportunity Officer shall meet with the complainant or his/her authorized representative within ten (10) business days from the date of receipt of the written allegations, to conduct a fact finding or investigation of the circumstances underlying the allegations and attempt to informally resolve the issue(s). The LWIA EO Officer's findings will be submitted in writing to the complainant not later than ten (10) business days following the fact-finding/investigation. The written notification shall include notice of the complainant's right to request a formal investigation by the EO Officer at the state level if a satisfactory resolution is not accomplished at the local level.

If the Complainant is dissatisfied with the attempted informal resolution, he/she must inform the LWIA EO Officer and the EO Officer at the State level within five (5) business days of receipt of the unsatisfactory decision and request a formal investigation by the State Equal Opportunity Office.

All complaints filed at the local level must be documented on the WIA/SESA local complaint log that is submitted to the State Equal Opportunity Office on a quarterly basis.

Procedures for Complaint Processing at the Local Workforce Investment Area State Equal Opportunity Office Level.

Acceptance of Complaint

If it is determined that the OEO has jurisdiction over the complaint/allegation filed, within ten (10) days of receipt, the Equal Opportunity Officer will send an acknowledgment of receipt of the letter to the complainant and advise him/her of the following:

(1) Their right to be represented in the complaint process;
(2) A list of the issues raised in the complaint;
(3) A statement of whether the issue will be accepted for investigation or rejected by the OEO; if rejected, the reason for the rejection; and,
(4) The right to seek resolution through the Mediation/Alternate Dispute Resolution (ADR) process. NOTE: If the complainant elects resolution through ADR, the complaint will be forwarded to a Mediator.

The Respondent will be notified that a complaint alleging discrimination has been filed and is being processed. He/she will also be advised if the complainant elects mediation as the means of resolution.

Otherwise, the Equal Opportunity Officer will meet with the complainant and/or his/her authorized representative and the respondent, within 15 days from the date of receipt of the written allegations, to initiate a fact finding or investigation of the circumstances underlying the allegations, and attempt to informally resolve the issue(s). If the complaint is resolved informally, the resolution will be documented and maintained in the OEO files.

If the Complainant is dissatisfied with the attempted informal resolution or prefers to have a formal investigation, an investigator will be assigned to the case. The investigator will interview the complainant, respondent and witnesses for both parties as identified by the parties. At the conclusion of the investigation, a *Notice of Final Determination* will be issued. *The Notice of Final Determination* will be strictly based on the evidence obtained during the investigation. The notice will be issued within 90 days of filing the complaint. The written notice will include, for each issue raised, a decision on the issue(s), an explanation of the reasons underlying the decision, or a description of the way the parties resolved the issue(s) and notification of recourse.

If by the end of the 90 days, the OEO has not completed processing the complaint or fails to issue a notice of Final Determination, the complainant or his/her representative may, within 30 days of the expiration of the 90-day period, file a complaint with the Director, Civil Rights Center (CRC) who may extend the 30 day time period for good cause shown.

If the Notice of Final Determination is issued during the 90-day period and the Complainant is dissatisfied with the decision, the complainant is advised of his/her right to file a complaint with the CRC within 30 days of the date on which the complainant received the *Notice of Final Determination.*

Non-Acceptance of Complaint

If a complaint is not within the jurisdiction of the OEO or CRC, is not timely filed, or does not have apparent merit, the complainant will be immediately notified in writing stating the reason for the lack of jurisdiction, i.e.,

- ✔ the basis for the complaint is not covered by the prohibitions set forth by 29 CFR Part 37;
- ✔ the complaint was not filed within the prescribed 180-day time-frame or;
- ✔ the complaint is against an entity that is not a recipient of WIA Title I financial assistance as defined by 29 CFR Part 37.

If the complaint is not within the jurisdiction of the Office of Equal Opportunity or the Civil Rights Center, but within the jurisdiction of another federal grant making agency, the complaint will be returned to the complainant, stating the reason(s) for the lack of jurisdiction. The complainant will be advised of the appropriate agency that handles the complaint.

If a complaint alleges discrimination by an entity that operates a program or activity financially assisted by a federal grant agency other than DOL but participates as a partner in a CareerLink, the following will apply:

- ✔ If the complaint alleges discrimination on a basis prohibited by Section 188 or Civil Rights laws, the OEO and the grant-making agency will have dual jurisdiction over the complaint.
- ✔ If the complaint alleges discrimination on a basis that is prohibited by Section 188 of WIA but not by any Civil Rights laws enforced by the federal grant-maker, the complaint will be referred to CRC who has sole jurisdiction over the complaint.

Alternate Dispute Resolution

As an alternative to the formal complaint process, complainants may choose to have their complaints processed through the Mediation/Alternate Dispute Resolution Process. This means that there will not be a full-blown formal investigation, but that a mediator will attempt to bring the complainant and the respondent together to work out an amicable solution to their problem(s). According to regulations, this option for processing a discrimination complaint must be offered to every complainant.

In order to fulfill requirements of WIA, the Office of Equal Opportunity, in conjunction with the Department of Labor & Industry's Bureau of Mediation, developed the ADR process that stipulates utilization of state mediators to mediate complaints filed by either clients or employees of grantees in Pennsylvania's administration of the WIA in order to ensure a highly professional and cost effective method of dispute resolution instead of the traditional complaint resolution process. If mediation is chosen, OEO will inform the Bureau of Mediation and a mediator will be assigned. The complaint will immediately be forwarded to the mediator. The complainant must allow 30 days for the mediation to take place. The choice of mediation rests solely with the complainant. If chosen, the respondent in the case will be notified of the selection. Any party to the settlement agreement reached in mediation may file a complaint with CRC if the agreement is breached. The complaint must be filed within 30 days from the date the non-breaching party learns of the breach. If CRC determines that the respondent breached the agreement, the complainant may file allegations based on his/her original charges with CRC.

The following are procedural guidelines to facilitate implementation:

- ✔ Equal Opportunity (EO) Officers in Pennsylvania's 23 investment areas will be responsible for referring complaints and/or allegations of discrimination for mediation to the Office of Equal Opportunity, Department of Labor & Industry.

- ✔ The Equal Opportunity Specialist (EOS), in consultation with the complainant, will refer the complaint to mediation.

- ✔ If a complainant signs an Agreement to Mediate Form, the complaint will be referred to one of three mediators from one of the three regions of the state. (This can be done by fax or mail. Mediators do not need to have a face-to-face meeting between the complainant and the EOS.)

- ✔ The OEO – L&I will coordinate the meeting date, time, and place with the complainant, the respondent, and the Mediator.

- ✔ The Mediator will assume jurisdiction of the complaint for 30 days, beginning with the initial referral, in writing, from the EOS.

- ✔ Within the 30-day period, the mediator will conduct Mediation session(s) and submit a Settlement Agreement to the referring EOS in Harrisburg, as well as the Bureau of Mediation.

Interface Between Office of Equal Opportunity (L&I) and Bureau of Mediation (L&I) To Implement Mediation Component Of Workforce Investment Act.

Utilization of state mediators in the mediation of complaints filed by either clients or employees of grantees in Pennsylvania's administration of the WIA should result in a highly professional and cost effective method of dispute resolution.

The following are procedural guidelines to facilitate implementation:

1. Equal Opportunity (EO) Officers in Pennsylvania's 23 investment areas will be responsible for referring complaints and/or potentially troublesome situations to the Office of Equal Opportunity (OEO) staff in Harrisburg.

2. The Equal Opportunity Specialist (EOS) in the OEO Harrisburg office, in consultation with the complainant, will refer the complaint either to investigation (not addressed in this document) or to mediation.

3. If a complainant signs an Agreement to Mediate Form the complaint will be referred to one of three mediators from three different regions of the state. (This can be done by fax or hard mail. A face-to-face meeting between the complainant and the EOS is not required.)

4. The EOS will coordinate the meeting date, time, and place with the complainant, the respondent, and the mediator.

5. The mediator will assume jurisdiction of the complaint for 30 days, beginning with the initial referral, in writing, from the EOS.

6. Within the 30-day period the mediator will conduct mediation session(s) and submit a Settlement Agreement to the referring EOS in Harrisburg, as well as the Bureau of Mediation.

7. In the event no agreement is reached the mediator will duly notify the EOS when mediation is terminated. In either event, the entire case file will be returned to the OEO.

8. Mediators will be held to the highest standards of ethical conduct and agree to recuse themselves if there is a potential conflict of interest or even the appearance of a potential conflict of interest.

Alternate Dispute Resolution (ADR)
Notification and Consent Form

The Office of Equal Opportunity (OEO) has adopted Mediation as an Alternate Dispute Resolution (ADR) process, in addition to the state level complaint process. The option to use mediation or the traditional state level investigative process rests with the Complainant. If the Complainant chooses mediation, the Respondent in the complaint will be so notified. An assigned Mediator will conduct the mediation and submit a Settlement Agreement, signed by both parties, to the OEO no later than thirty (30) days from the date of receipt of the mediation request form. In the event an agreement is not reached, the Mediator will duly notify OEO when mediation is terminated and the case will be immediately referred for investigation.

I have read the above notification of my right to request Mediation as a means for Alternate Dispute Resolution (ADR). My signature below indicates my selection/or rejection of the offer.

✔ Check one

☐ Consent is hereby given for the Office of Equal Opportunity to schedule mediation to resolve my allegation(s) of discrimination. In so doing, I retain my right to a formal investigation if a settlement cannot be reached.

☐ I do not consent to have my complaint mediated. I request that the Office of Equal Opportunity conduct an investigation of my allegation(s).

_____ _____

Signature Date

Pennsylvania Department of Labor & Industry
Office of Equal Opportunity

Agreement to Mediate

Case I.D. _____ Date _____

The complainant, _____, and the respondent _____
both agree to the following:

1. Both parties agree to voluntarily mediate their dispute currently pending before the PA Department of Labor & Industry - L&I Office of Equal Opportunity.

2. Each party agrees to make a good faith effort to resolve the dispute. It is understood that mediation is independent of and does not supplant external equal opportunity complaint procedures, existing grievance procedures and/or governing collective bargaining agreements.

3. The mediator will not act as a judge, lawyer, arbitrator or advocate in this process, but will function as a neutral third party to facilitate an acceptable agreement between the parties.

4. The complainant, the respondent, the mediator, and any other parties present during the mediation session agree that all discussions taking place during the mediation are confidential. No information divulged during the mediation session(s) may be used in court or in any legal or administrative proceedings.

5. In the event that no agreement or settlement of the dispute is reached, all parties agree that the mediator will not be subpoenaed or called as a witness in any subsequent legal or administrative proceeding.

6. The mediation may terminate if:

   - ✔ either party desires to end the mediation;
   - ✔ the mediator determines the parties are deadlocked and are unlikely to resolve the dispute;
   - ✔ the parties reach an agreement.

Pennsylvania Department of Labor & Industry
Office of Equal Opportunity

Mediation/Alternate Dispute Resolution Settlement Agreement

Case I.D. _____

A mediation session was held on _____ (date) between _____, the complainant, and _____, the respondent. The agreement represents a voluntary resolution of the dispute reached by the aforementioned parties that is currently pending before the Pennsylvania Department of Labor and Industry's Office of Equal Opportunity. All parties agree to the following:

1. _____

_____

2. _____

_____

3. _____

_____

All the parties agree that this Agreement is binding upon them and that the Agreement represents the full and complete resolution of their dispute. Further, the parties affirm that all discussions taking place during the mediation session(s), as well as the terms of settlement, are governed by the confidentiality guidelines.

_____ _____
Complainant Respondent

(if applicable)

_____ _____
Attorney/Witness for Complainant Attorney/Witness for Respondent

Mediator _____

Date _____

Pennsylvania Department of Labor & Industry
Office of Equal Opportunity

Mediation Sign-in Sheet

Pennsylvania OEO Case ID: _____

Complainant: _____

Respondent: _____

Location: _____

Date: _____

By their signature the parties acknowledge:

1. The entire mediation process is privileged and confidential.

2. The settlement negotiations and all offers, promises, conduct and statements, whether written or oral, made in the course of the proceedings are not admissible in any subsequent investigation, arbitration, or litigation of this dispute.

3. ONLY signed copies of the negotiated agreement will be taken from the mediation site. Personal notes or other documentation created during the course of mediation will be destroyed prior to leaving the mediation site.

_____ Complainant

_____ Attorney/Witness (if applicable)

_____ Respondent

_____ Attorney/Witness (if applicable)

_____ Mediator

	Complainant	Respondent
Address	_____	_____
	_____	_____
	_____	_____
Telephone	Home _____	Home _____
	Work _____	Work _____
	Fax _____	Fax _____
Print Name	_____	_____
Signature	_____	_____
Attorney Signature (If applicable)	_____	_____

ELEMENT 9.

Corrective actions/sanctions 29 CFR (37.54(d) (2) (vii)

The State should address how it and its recipients are complying and will continue to comply with the requirements of 37.54(d) (2) (vii)).

The standard for corrective and remedial actions to be applied when violations of Section 188 or 29 CFR, Part 37 are found. Corrective and remedial actions must be designed to completely correct each violation. For each corrective action, a time frame should be established that sets the minimum time necessary to completely correct the violation. In the case of a finding of discrimination, the procedures must provide, where appropriate, for retroactive relief (including but not limited to back pay) and prospective relief (e.g., training, policy development and communication) to ensure that the discrimination does not recur.

- Corrective action may take place whenever a SESA or LWIA is cited as the result of an Equal Opportunity Compliance Review or a complaint investigation. When there are findings of discrimination, a conciliation agreement and/or corrective action plan is required. The corrective action must address the particular act of discrimination and must include timetables by which the corrective action will be implemented. Corrective action may include recoupment of lost earnings the victim may have suffered. A written assurance must accompany a corrective action (to help ensure that the discrimination does not recur) stating that the SESA/LWIA Office will cease in its discriminatory practices.

  Technical deficiencies may require a different time frame for corrections than findings of discrimination. The EO Specialist will notify the SESA or LWIA in writing of the deficiencies found during EO Compliance Reviews along with a suggested corrective action plan. The SESA or LWIA will be required to provide a corrective action plan that includes written assurances to certify that a deficiency has been corrected – including the timeframe for correction. The assurance will attest that the SESA or LWIA office will continue to take steps to ensure that the deficiency(s) do not recur. The SESA Office Manager or LWIA Director must sign the assurance.

  When an Equal Opportunity Compliance Review results in identification of deficiencies or noncompliance that cannot be resolved or corrected on a voluntary basis, the Equal Opportunity Specialist at the State level provides technical assistance. A follow-up visit is conducted, where necessary, to evaluate the degree of progress made toward resolving existing noncompliance factors.

The procedures for follow-up monitoring to ensure that commitments to take corrective action and remedial action are fulfilled.

- The SESA or LWIA is made aware at the Equal Opportunity Review and Exit Conference or Technical Assistance Training, that follow-up monitoring can occur at any time. In instances where deficiencies are identified and Corrective Action Plans are submitted, on-site follow-up may occur within 30 days from receipt of the corrective action plan, to assess the adequacy of the corrective action. In accordance with 37.63(b) a letter advising the recipient of the program, practice or information that will be reviewed.

Reports required from the violating recipient regarding actions to correct the violations.

- Training rosters, written assurances, along with documentation of on-site inspections or other appropriate documentation may be required to confirm correction of deficiencies/violations.

Sanction procedures to be followed where voluntary compliance cannot be achieved – SESAs.

- Sanctions are imposed when a SESA office will not agree to or take voluntary corrective action. A report of findings, listing all deficiencies along with a suggested Corrective Action Plan is sent to the SESA office. Time frames to implement corrective action are given. Failure to meet corrective action deadlines will initiate the writing of a stronger letter stating that the SESA office must provide a plan documenting the deficiencies and corrective action taken. Additionally, they are told that if they do not take steps for an appropriate corrective action, further action may be initiated which could affect program funding. Technical assistance is offered to the SESA office to provide assistance in the attempt to take corrective action. Once the Office of Equal Opportunity receives a corrective action plan, a conciliation agreement will be written and signed by all parties. Time frames are set for corrective action. Sanctions are tailored to fit the deficiency and the ultimate plan must correct all deficiencies or steps will be taken to involve the Civil Rights Center (CRC). If after all avenues for resolution at the State level are exhausted, and deficiencies are not effectively corrected, the SESA office will be notified that the information will be or has been referred to the U.S. Department of Labor, Civil Rights Center, for further action at the Federal level.

Sanction procedures to be followed where voluntary compliance cannot be achieved – LWIAs.

After all attempts to provide assistance and correction of deficiencies fail, the imposition of sanctions will be considered. The sanctions imposed for noncompliance will be on a case-by-case basis, and may include any or all of the following:

1. Make whole remedies for discriminatory practices.
2. Establishment and issuance of policies as applicable to the violation.
3. Placement into a training program or hire into a vacant position for which one may have been qualified but denied.
4. Discontinue referral of participants to sites against which discrimination allegations have been alleged and proven.
5. Removal of participants from sites refusing to implement corrective actions.

The ultimate sanction will be the referral to the U. S. Department of Labor, Civil Rights Center for enforcement or recommendation for suspension of funds until compliance is met.

When a LWIA is given an Equal Opportunity Compliance Review, they are told that an EO Compliance Review Report will be sent to them, listing all deficiencies found during the review as well as suggested corrective actions to correct those deficiencies. They are given time frames to complete and implement the corrective action, and to assure that the corrections are made by submitting documentation or a proposed Corrective Action Plan.

The EO Specialist reviews the Corrective Action Plan. If the Plan assures and states that the corrective action has been implemented, the Office of Equal Opportunity sends a letter of compliance and notifies them that a follow-up review could occur at any time to verify the corrective action.

If all attempts to provide assistance and correction of deficiencies fail, the imposition of sanctions begin as stated above.

LOCAL WORKFORCE INVESTMENT AREAS

BERKS COUNTY WORKFORCE INVESTMENT BOARD (SE015)

Edward J. McCann, Director of Workforce Development/Chief Operating Officer
C/o Berks County CareerLink
501 Crescent Avenue
Reading, PA 19605-3050
Phone (610) 988-1363
Fax (610) 988-1301
Email emccann@bccl.org

John Moser, EO Officer
501 Crescent Avenue
Reading, PA 19605
Phone (610) 988-1358
Email jwmoser@bccl.org

BUCKS COUNTY WORKFORCE INVESTMENT BOARD (SE020)

Elizabeth Walsh, Executive Director
1268 Veterans Highway
Bristol, PA 19007
Phone (215) 874-2800 ext. 109
Fax (215) 874-2804
Email ewalsh@bc-wib.org

Thom Lord, EO Officer
Bucks County Office of Employment and Training
1268 Veterans Highway
Bristol, PA 19007
Phone (215) 874-2802 ext. 108
Fax (215) 874-2804
Email tlord@bc-wib.org

CENTRAL PENNSYLVANIA WORKFORCE INVESTMENT BOARD (CE175)

(Centre, Clinton, Columbia, Lycoming, Mifflin, Montour, Northumberland, Snyder, Union)

Erica Mulberger, Acting Executive Director
130 Kelly Square, Suite 1
Lewisburg, PA 17837
Phone (570) 568-6868 ext.225
Fax (570) 568-6861
Email emulberger@cpwdc.org

Sandra Fairman, EO Officer
130 Kelly Square, Suite 1
Lewisburg, PA 17837
Phone (570) 568-6868 ext. 228
Fax (570) 568-6861
Email sfairman@cpwdc.org

CHESTER COUNTY WORKFORCE INVESTMENT BOARD (SE030)

Patrick Bokovitz, Director
601 Westtown Road, Suite 365
P.O. Box 2747
West Chester, PA 19380-0990
Phone (610) 344-6900
Fax (610) 344-6925
Email pbokovitz@chesco.org

Lila Singleton, EO Officer
601 Westtown Road, Suite 365
P.O. Box 2747
West Chester, PA 19380-0990
Phone (610) 344-6900
Email lsingleton@chesco.org

DELAWARE COUNTY WORKFORCE INVESTMENT BOARD (SE035)

Frank Carey, Director
Barclay Center
1570 Garrett Road, Suite A
Upper Darby, PA 19082
Phone (610) 713-2216
Fax (610) 713-2224
Email careyf@co.delaware.pa.us

Deborah Callaghan, Assessment Manager/EO Officer
Office of Workforce Development
Barclay Center
1570 Garrett Road, Suite A
Upper Darby, PA 19082
Phone (610) 713-2202
Fax (610) 713-2224
Email callahand@co.delaware.pa.us

LACKAWANNA COUNTY WORKFORCE INVESTMENT BOARD (NE055)

Virginia Turano, Executive Director
Scranton Enterprise Center
201 Lackawanna Ave., Suite 215
Scranton, PA 18503
Phone (570) 342-3649
Fax (570) 342-3653
Email vturano.lcwib@verizon.net

Cathy Gerard, EO Officer
135 Franklin Avenue
Scranton, PA 18503
Phone (570) 344-7037
Fax (570) 963-4984
Email cgerard@dli.state.pa.us

LANCASTER COUNTY WORKFORCE INVESTMENT BOARD (SE060)

Scott J. Sheely, Executive Director
313 W. Liberty Street, Suite 114
Lancaster, PA 17603
Phone (717) 735-0333
Fax (717) 735-0335
Email ssheely@lancastercountywib.com

Kim Sullenberger, Deputy Director/EO Officer
Lancaster County Workforce Investment Area
313 West Liberty Street, Suite 114
Lancaster, PA 17603
Phone (717) 735-0333
Fax (717) 735-0335
Email ksullen@lancastercountywib.com

LEHIGH VALLEY WORKFORCE INVESTMENT BOARD (LV070)

(Lehigh, Northampton)

Nancy Dischinat, Executive Director
1601 Union Boulevard
P.O. Box 20490
Lehigh Valley, PA 18002-0490
Phone (610) 841-1123
Fax (610) 437-3527
Email ndischinat@lvwib.org

Carol Almond, EO Officer/Employment & Training Specialist
Private Industry Council of Lehigh Valley, Inc.
1601 Union Boulevard
Lehigh Valley, PA 18002-0490
Phone (610) 751-9998
Fax (610) 437-4392
Email calmond@lvwib.org

LUZERNE/SCHUYLKILL COUNTIES WORKFORCE INVESTMENT BOARD (NE075)
Patricia Lenahan, Interim Executive Director
22 East Union Street
Wilkes-Barre, PA 18701-2793
Phone (570) 822-1101 ext. 299
Fax (570) 970-4050
Email patricialenahan@lswib.org

Marla Doddo, EO Officer
22 East Union Street, Suite 115
Wilkes-Barre, PA 18701-2793
Phone (570) 822-1101 ext. 214
Fax (570) 970-4050
Email: marladoddo@lswib.org

MONTGOMERY COUNTY WORKFORCE INVESTMENT BOARD (SE080)
Marisol Lezcano, Executive Director
Montgomery County Department of Economic and Workforce Development
Human Services Center
1430 DeKalb Street, 5th Floor
P.O. Box 311
Norristown, PA 19404-0311
Phone (610) 278-5952
Fax (610) 278-5944
Email mlezcano@montcopa.org

Mike Shea, EO Officer Monitoring
Montgomery County Department of Economic and Workforce Development
Human Services Center
1430 DeKalb Street, 5th Floor
P.O. Box 311
Norristown, PA 19404-0311
Phone (610) 278-5938
Fax (610) 278-1100
Email mshea@montcopa.org

NORTH CENTRAL PA WORKFORCE INVESTMENT AREA (NC125)

(Cameron, Clearfield, DuBois Area, Elk, Jefferson, McKean, Potter)

Susan R. Snelick, Director
651 Montmorenci Road
Ridgway, PA 15853
Phone (814) 773-3162
Toll Free 1-800-242-5872
Fax (814) 772-7045
Email ssnelick@ncwib.org

James Stockdale, EO Officer
651 Montmorenci Road
Ridgway, PA 15853

Phone (814) 773-3162
Toll Free 1-800-242-5872
Fax (814) 772-7045

Email jstockdale@ncentral.com

NORTHWEST PA WORKFORCE INVESTMENT AREA (NW170)

(Clarion, Crawford, Erie, Forest, Oil Region, Venango, Warren)

Michele Zieziula, CEO
764 Bessemer Street, Suite 102
Meadville, PA 16335
Phone (814) 333-1286 Ext. 103
Fax (814) 333-1754
Email michelez@nwpawib.org

Paul Newlin, EO Officer
764 Bessemer Street, Suite 102
Meadville, PA 16335
Phone (814) 333-1286 Ext. 105
Fax (814) 333-1754
Email pnewlin@nwpawib.org

NORTHERN TIER WORKFORCE INVESTMENT BOARD (NT130)

(Bradford, Sullivan, Susquehanna, Tioga, Wyoming)

Frank Thompson, Deputy Director
Northern Tier Regional Planning and Development Commission
312 Main Street
Towanda, PA 18848
Phone (570) 265-9103
Fax (570) 265-1533
Email thompson@northerntier.org

Cynthia Fay, EO Officer
Northern Tier Region Planning and Development Commission
312 Main Street
Towanda, PA 18848
Phone (570) 265-9103
Fax (570) 265-1533
Email fay@northerntier.org

PHILADELPHIA WORKFORCE INVESTMENT BOARD (SE090)

Mark Edwards, President/CEO
Philadelphia Works
1617 John F. Kennedy Boulevard, 13th Floor
Philadelphia, PA 19103
Phone (215) 963-2121
Email medwards@philaworks.org

Sharon Riley, EO Officer
1617 John F. Kennedy Boulevard, 13th Floor
Philadelphia, Pennsylvania 19103
Phone (215) 963-2118
Fax (215) 557-2648
Email sriley@philaworks.org

POCONO COUNTIES WORKFORCE INVESTMENT BOARD (NE135)
(Carbon, Monroe, Pike, Wayne)

Joseph Sebelin, Executive Director
76 Susquehanna Street, Suite 1
Jim Thorpe, PA 18229
Phone (570) 325-2462
Fax (570) 325-8547
Email jsebelin@ptd.net

Will Coombs, EO Officer
76 Susquehanna Street, Suite 1
Jim Thorpe, Pa 18229
Phone (570) 325-2462
Fax (570) 325-8547
Email wilco401@comcast.net

SOUTH CENTRAL WORKFORCE INVESTMENT BOARD (SC180)
(Adams, Cumberland, Dauphin, Franklin, Juniata, Lebanon, Perry, York)

Mike Lawrence, Interim Executive Director
4201 Crumsmill Road, Suite 200
Harrisburg, PA., 17112
Phone (717) 236-7936 Ext 8164
Toll Free 1-800-932-0635
Fax (717) 236-4426
Email : mlawrence@wibpa.org

Joseph E. Alsberry, EO Officer/Director of Quality Assurance
4201 Crumsmill Road, Suite 200
Harrisburg, PA., 17112
Toll Free 1-800-932-0635
Phone (717)-236-7936, x8166
Direct (717)-920-2840
Fax (717)-236-4426
Email jalsberry@pasec.org

SOUTHERN ALLEGHENIES WORKFORCE INVESTMENT BOARD (SA100)

(Bedford, Blair, Cambria, Fulton, Huntingdon, Somerset)

Susan Whisler, Director
Southern Alleghenies Planning & Development Commission
541 58th Street
Altoona, PA 16602
Phone (814) 949-6507
Fax (814) 949-6505
Email whisler@sapdc.org

Deborah Shaffer, EO Officer/HR Administrative Officer
541 58th Street
Altoona, PA 16602
Phone (814) 949-6513
Fax (814) 949-6582
Email dshaffer@sapdc.org

SOUTHWEST CORNER WORKFORCE INVESTMENT BOARD (SW165)

(Beaver, Greene, Washington)

Linda Bell, Vice President
Washington Greene County Job Training Agency
351 West Beau Street, Suite 300
Washington, PA 15301
Phone (724) 229-5083
Fax (724) 229-5086
Email lbell@washingtongreene.org

Dacia Mace, EO Officer/Oversight Coordinator
Jeffrey Nobili, EO Coordinator/Corp. Mgr.
351 West Beau Street, Suite 300
Washington, Pa 15301
Phone (724) 229-5083
Fax (724) 229-5086
Email dmace@washingtongreene.org
jnobili@washingtongreene.org

THREE RIVERS WORKFORCE INVESTMENT BOARD (OVERSEES ALLEGHENY WIA & PITTSBURGH WIA)

Stefani Pashman, Chief Executive Director
Three Rivers Workforce Investment Board
Center City Tower, Suite 2600
650 Smithfield St
Pittsburgh, PA 15222
Phone (412) 552-7090
Fax (412) 552-7091
Email spashman@trwib.org

Jodi Leipold-Mostel
Three Rivers Workforce Investment Board

Center City Tower, Suite 2600
650 Smithfield St
Pittsburgh, PA 15222
Phone: (412) 552-7096
Fax: (412) 552-7091
Email: jleipold-mostel@trwib.org

TRI-COUNTY WORKFORCE INVESTMENT BOARD (SW110)

(Armstrong, Butler, Indiana)

Mr. Fred Fornataro, Executive Director
Pullman Commerce Center
112 Hollywood Drive, Suite 201
Butler, PA 16001
Phone (724) 282-9341
Fax (724) 282-4896
Email ffornataro@tcwib.net

Mary Salony, Acting EO Officer
Pullman Commerce Center
112 Hollywood Drive, Suite 201
Butler, PA 16001
Phone (724) 282-9341 ext.2
Fax (724) 282-4896
Email msalony@tricountywib.org

WEST CENTRAL WORKFORCE INVESTMENT BOARD (NW145)

(Lawrence, Mercer)

Mr. Gregg K. Dogan, Chief Financial Officer
44 South Beaver Street
New Castle, PA 16101
Phone (724) 658-2501 ext. 213
Fax (724) 658-4252
Email gdogan@wcjp.org

Debra Paladino, EO Officer
44 South Beaver Street
New Castle, Pa 16101
Phone (724) 658-2501 ext. 214
Fax (724) 658-4252
Email Dpaladino@Wcjp.Org

WESTMORELAND-FAYETTE WORKFORCE INVESTMENT BOARD (SW045)
(Alle-Kiski, Fayette, Westmoreland)

William J. Thompson, Executive Director
Westmoreland County Community College
Business & Industry Center
145 Pavilion Lane
Youngwood, PA 15697
Phone (724) 755-2145
Fax (724) 755-0914
Email wthompson@westfaywib.org

Melissa Keys, EO Officer
145 Pavilion Lane
Youngwood, Pa 15697
Phone (724) 755-2145
Fax (724) 755-0914
Email mkeys@westfaywib.org

pennsylvania

STATE INTEGRATED WORKFORCE PLAN FOR WIA AND WAGNER-PEYSER ACT PROGRAMS

for the period of
JULY 1, 2012 *through* JUNE 30, 2017
Effective: July 1, 2012

Tom Corbett
Governor

Pennsylvania's Integrated Workforce Plan

Table of Contents

Section I – Strategic Plan 1

Governor Corbett's Vision 1

State of the State 2

Labor Market Realities 3

Growth Industries 4

Skills Mismatch 5

Workforce System Design 7

Strategy 8

Goal A: Develop a Competitive Workforce 9

Goal B: Better Connect Job Seekers with Employers 10

Goal C: Build a Pipeline of Talent 12

Goal D: Build a Strong Fiscal Foundation 14

Desired Outcomes 15

Table 1. State WIA/Wagner-Peyser Performance Indicators and Goals 15

Table 2. Performance Targets for Jobs for Veterans (State Grant-Funded Services) 16

Table 3. Senior Community Service Employment Plan (SCSEP) Core Performance Measures 16

Plan Development 16

Section II – Operational Plan 19

1.0. Overview of the Workforce System 19

Introduction 19

Organization 19

The Pennsylvania Workforce Investment Board (PA WIB) 19

Local Workforce Investment Areas (LWIAs) 20

2.0. Operating Systems and Policies Supporting Workforce Strategies 21

Operating Systems Supporting Coordinated Implementation of Strategies 21

Policies Supporting Coordinated Implementation of Strategies 22

Alignment of Delivery Systems to Jobseekers and Employers 22

Performance Accountability System for WIA Activities 24

Common Data Collection and Reporting Processes 26

Pennsylvania's Integrated Workforce Plan

Table of Contents

Section I – Strategic Plan **1**

Governor Corbett's Vision 1

State of the State 2

Labor Market Realities 3

Growth Industries 4

Skills Mismatch 5

Workforce System Design 7

Strategy 8

Goal A: Develop a Competitive Workforce 9

Goal B: Better Connect Job Seekers with Employers 10

Goal C: Build a Pipeline of Talent 12

Goal D: Build a Strong Fiscal Foundation 14

Desired Outcomes 15

Table 1. State WIA/Wagner-Peyser Performance Indicators and Goals 15

Table 2. Performance Targets for Jobs for Veterans (State Grant-Funded Services) 16

Table 3. Senior Community Service Employment Plan (SCSEP) Core Performance Measures 16

Plan Development 16

Section II – Operational Plan **19**

1.0. Overview of the Workforce System 19

Introduction 19

Organization 19

The Pennsylvania Workforce Investment Board (PA WIB) 19

Local Workforce Investment Areas (LWIAs) 20

2.0. Operating Systems and Policies Supporting Workforce Strategies 21

Operating Systems Supporting Coordinated Implementation of Strategies 21

Policies Supporting Coordinated Implementation of Strategies 22

Alignment of Delivery Systems to Jobseekers and Employers 22

Performance Accountability System for WIA Activities 24

Common Data Collection and Reporting Processes 26

Strategies for Using Quarterly Wage-Record Information 26
3.0. Business Engagement 27
Planned Improvements to Business Services 27
Additional Resources and Benefits Provided to Employers 28
4.0. Services to State Targeted Populations 30
Targeted Populations 30
Persons with Disabilities 36
Delivery of Comprehensive Services for Eligible Youth 38
5.0. Agricultural Outreach Plan (AOP) 41
PY 2011 Agricultural Activity 42
PY 2011 MSFW Activity 43
Outreach Activities 45
Services Provided to MSFWs through the PA CareerLink® Delivery System 46
Services Provided to Agricultural Employers through the PA CareerLink® System 47
6.0. Senior Community Service Employment Program (SCSEP) Plan 48
Plan for Training SCSEP Participants 48
Targeting and Priority of Services 51
SCSEP Activities - Program Coordination 51
Long-term SCSEP Plan 55
7.0. WIA Rapid Response Activities 57
Strategies for Program Enhancement 58
8.0. Trade Adjustment Assistance (TAA) 59
Core and Intensive Services Provided to TAA Participants 60
9.0. WIA Waiver Requests 61
Previously Approved Waivers 61
Section III – Assurances 64
Assurances and Attachments – Planning Process and Public Comment 64
Assurances and Attachments – Required Policies and Procedures 66
Assurances and Attachments – Administration of Funds 69
Assurances and Attachments – Eligibility 71
Assurances and Attachments – Personnel and Representation 72

Appendices **76**

Appendix A – Plan Comments 76

Appendix B – Organizational Chart 79

Appendix C – Organizational Chart Key 80

Appendix D – Formula Allocation Procedures 89

Appendix E – Workforce Program Activities 96

Appendix F – Labor Exchange Policies & Procedures 102

Appendix G – Priority of Service Policies 133

Appendix H – Statewide Industry Employment Projections 141

Appendix I – OJT 144

Appendix J – Ratio of Income to Poverty for the Population 55 and Over 149

Appendix K – Greatest Economic Need Data 151

Appendix L – SCSEP Minority Data 152

Appendix M – Limited English Proficiency (LEP) Data 153

Appendix N – Rapid Response Overview Attachment 154

Appendix O – Waiver Requests 157

Appendix P – Local and Regional Workforce Investment Area Designations 168

Section I – Strategic Plan

Governor Corbett's Vision

Pennsylvania will be recognized for an economic environment that successfully attracts and supports new businesses and industries, while simultaneously supporting, growing and promoting those companies that have long called the commonwealth their home.

The road to recovery will be paved with a quality workforce, education, and training programs that deliver the knowledge, skills and abilities to support current industry, foster economic growth, promote incumbent worker advancement and put hardworking Pennsylvanians back to work.

The commonwealth will cultivate a demand-driven workforce to provide employers with the resources they need to compete and grow, such as:

- Business-friendly tax and legal reforms;
- A highly-skilled workforce trained for high-priority and in-demand occupations;
- Employer driven partnerships with industry; and
- Innovative economic and workforce development services.

JOBSFirst PA is the catalyst for economic recovery and growth in Pennsylvania, providing a comprehensive roadmap that harnesses the commonwealth's resources and talents to prioritize private-sector job creation and retention. The fundamental building blocks include:

- Programs and policies to bridge the skills gaps magnified by the recent recession;
- The development and expansion of career pathways;
- More effective job matching services to assist all job seekers; and
- Education and training investments targeted to high-priority occupations that lead to family supporting jobs.

JOBSFirst PA is a path to certainty, stability and opportunity for Pennsylvania's job creators and it puts the citizens of Pennsylvania first. It is guided by the belief that government does not create jobs, but rather fosters an environment where companies can increase profitability and productivity to grow and create jobs. To achieve sustainable economic growth, JOBSFirst PA embraces innovation, prioritizes governmental reform and workforce development, and launches entrepreneurial initiatives to grow industries and establish a business climate that positions job creators to compete nationally and globally.

State of the State

Pennsylvania is home to the second-largest energy resource field in the world. The state's agricultural base, manufacturing capacity and work ethic set it apart from other states. The commonwealth's world-class postsecondary education systems, incubators and proximity to nearly one-half of the nation's population and markets combine to make the job creation potential limitless. Pennsylvania capitalizes on these and other resources, such as:

- A labor force of six million;
- A diverse industry base comprised of 270,000 businesses; and,
- More than 273 institutions of higher education.

The Pennsylvania Department of Labor & Industry (L&I), through its Center for Workforce Information and Analysis (CWIA), collects and analyzes data on the labor market, demographics and workforce and industry trends. CWIA converts the data into usable information (which it publishes in print and on its website) for the commonwealth's workforce development partners to collaboratively develop strategies and target workforce investment funds, ensuring they are directed to program and training areas that will produce optimal outcomes for Pennsylvania's businesses and families, and provide the greatest return on investment. Examples of useful publications issued by CWIA include: Pennsylvania Fast Facts (monthly); Workforce Investment Area (WIA) Fast Facts (monthly); Marcellus Shale Fast Facts (monthly); Minimum Wage reports (annually); Economic Review of Pennsylvania (annually); Long Term and Short Term Occupational Projections and Forecasts (biennial); and other special reports as needed. These resources include current and past labor force trends, job growth statistics and occupational outlook information. They highlight such things as opportunities in the rapidly growing Marcellus Shale fields, as well as occupations in demand statewide and in local workforce areas.

This plan will serve as the platform for Local Workforce Investment Board (LWIB) alignment with the Pennsylvania Workforce Investment Board (PA WIB). It will ensure that the commonwealth continues to develop and expand upon the resources within its labor force, education system and industry base to meet the critical workforce and education needs of all Pennsylvanians.

Attention is increasingly focused on effective workforce and economic development to ensure growth is sustained and the economic turnaround is solidified. Pennsylvania is increasing opportunities for affordable, effective and appropriate skills training while at the same time increasing investments to support job creators. Strategic investments outlined in this plan will be implemented to create an environment where opportunities are plentiful. This workforce strategy will provide a skilled workforce for all of Pennsylvania's employers, help the unemployed find long-term, family-sustaining employment and align job-seekers with the increasing number of jobs now posted online.

Labor Market Realities

The National Bureau of Economic Research (NBER) determined that a national economic recession began in December 2007 and officially ended in June 2009. As the effects deepened in the commonwealth, Pennsylvania's unemployment rate increased from 4.4 percent in 2007 to 8.5 percent in 2010, as nearly all industries experienced job losses. The Great Recession may be officially over, but its lasting effects continue to provide challenges for Pennsylvania's workforce and employers. Signs of recovery became evident in 2011 as the statewide unemployment rate fell to 7.9 percent. The statewide unemployment rate has fallen gradually to its current level of 7.5 percent since peaking at 8.7 percent in March 2010. The indicators of an economic recovery continue in 2012 and are starting to manifest into monthly reductions in the unemployment rate, and increases in jobs and the size of the labor force. The graph below illustrates Pennsylvania's unemployment trend as compared to the national rate since 2007.

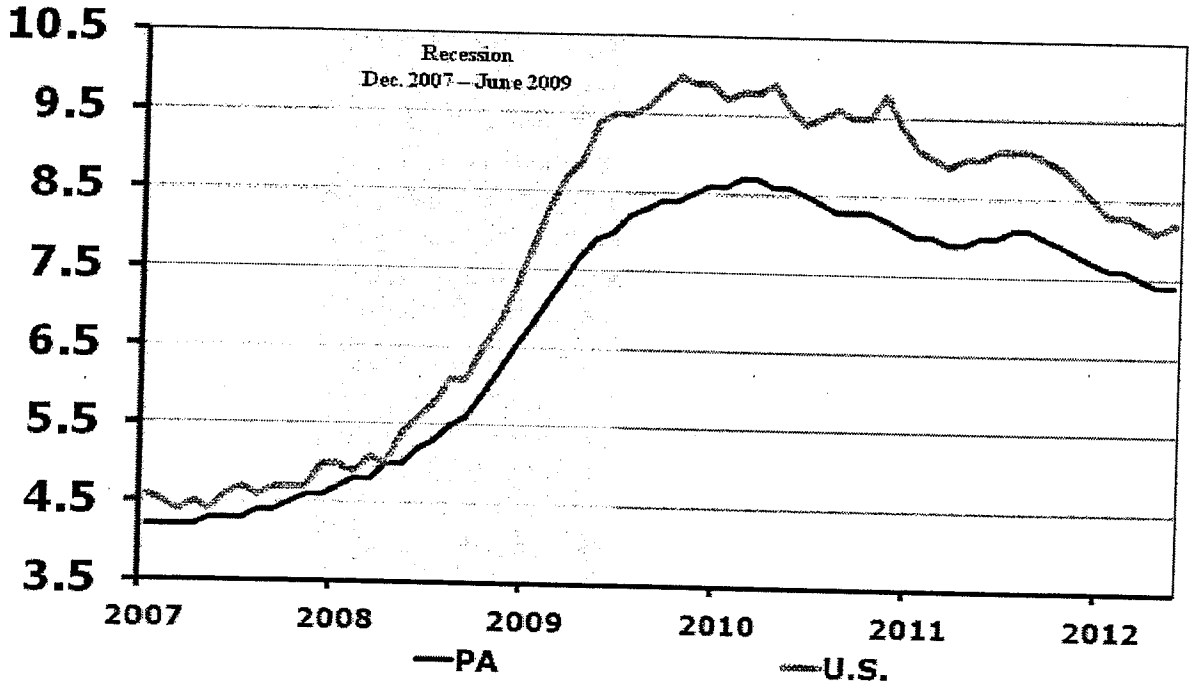

While all 23 Local Workforce Investment Areas (LWIAs) experienced lower unemployment rates during the recovery, the progress on this front was uneven, as the unemployment rates in some regions continued to remain elevated. In 2011, four of the LWIAs had an unemployment rate in excess of 9.0 percent, and one (Philadelphia) remained over 10.0 percent during the early months of 2012. Regional economic information is available to LWIAs and the general public through *Fast Facts*, published by CWIA.

Additional labor market information of relevance to the strategic plan includes:

- Over 480,000 Pennsylvanians are unemployed, 306,000 are still collecting unemployment compensation and many others are underemployed or have withdrawn

from the labor force;

- Nearly 186,000 Pennsylvanians have been unemployed for more than 26 weeks;
- In March 2012, Pennsylvania had more than 190,000 online job postings; and,
- According to the 2010 U.S. Census, Pennsylvania's 3.4 percent population growth from 2000 lagged behind the nation's 9.7 percent growth over the same period.

With a substantial number of unemployed and a large number of job openings within Pennsylvania's labor market, numerous opportunities exist for the workforce system to provide effective services.

Growth Industries

From 2010 to 2011, jobs increased by 63,500 to a level of 5,687,100. Private employment was up even greater (80,500) but was offset by a reduction of 17,100 government jobs. Goods-producing jobs in the state were up 16,800 from 2010; however, they were 1,800 fewer than in 2009 and still down 123,300 from 2007 when the recession began. However, in all three goods-producing industry sectors, Mining & Logging, Construction and Manufacturing, employment levels were up from one year ago. Mining & Logging jobs increased in each year since 2007. In the past, jobs increased by 25.9 percent, and jobs increased by 58.8 percent since 2007. Pennsylvania has a tremendous opportunity to create additional jobs with the discovery and ability to recover natural gas in the Marcellus Shale region. Led by Marcellus Shale opportunities, employment in natural gas core industries rose by more than 17,000 from 2008 to 2011, an increase of more than 150 percent. During the same time period, approximately 400 business establishments were added in these industries.

Service-providing jobs increased to 4,867,900 in 2011, an increase of 46,700 from the prior year. This was still below the 2008 total. Since the start of the recession, Pennsylvania's best performing service-providing industry sectors have been: Educational Services; Management of Companies; Arts, Entertainment & Recreation; and Health Care & Social Assistance. Employment Services, which include staffing agencies, decreased during the course of the recession from 2007 through 2009, but is steadily increasing as the recovery takes hold. The level of Employment Services in 2011 was essentially equal to its 2007 (pre-recession) level. Typically, in the early stages of an economic recovery, some firms will expand their labor force by extending hours and/or hiring temporary workers, and only when they are convinced that the rebound has taken hold will they increase their permanent complement.

The Manufacturing and Healthcare industries have offered good employment opportunities following the recession. Manufacturing has gained jobs in 19 of the past 26 months and has added 13,500 jobs since the beginning of 2010. CWIA's analysis shows that for every manufacturing job created, an additional 2.1 jobs are created throughout the rest of the economy. Healthcare employment remained steady throughout the recession and continues to provide opportunities due to attrition and employment growth.

As the economy continues to recover, other industries such as Leisure & Hospitality and Professional & Business Services are projected to experience above-average growth, based on the latest industry employment projections produced by CWIA. Identifying and meeting the workforce needs of these industries so that they can continue to thrive is paramount to the continued success of the state's economy.

Through an evaluation of labor market realities, growth industries and the professions facing a skills mismatch, CWIA projects future industry growth trends and the occupations most needed to advance those enterprises. CWIA's annual High-Priority Occupations (HPO) list identifies occupations critical to the success of Pennsylvania's industry clusters. These occupations are in demand by employers and pay family-sustaining wages. Workforce training investments are driven by the alignment of these occupations to training programs.

Based on CWIA data, Pennsylvania is targeting the manufacturing, energy and health care sectors in this strategic workforce plan.

Skills Mismatch

Throughout the recession and recovery, employers have struggled to fill critical workforce positions yet individuals remain unemployed for extended periods. Youth in particular, including recent graduates of both high school and college, have struggled to find employment. Job prospects are even worse for disengaged youth, including high school dropouts and youth with disabilities.

Much of this paradox has been anecdotally attributed by employers to a skills mismatch. The skills today's workers most need are obtained through advanced education and training, resulting in relevant credentials that are valued by employers. Pennsylvania labor market data has identified utilities, manufacturing and healthcare industries as having a supply/demand gap due to an aging workforce. Feedback from employers suggest that many candidates lack the occupational-specific, job-ready skills for vacancies due to innovation and technological advances in industry.

In an effort to verify and quantify information around skills needs, the commonwealth has designed a survey which will be administered to a sample population of employers to identify which skills are perceived by employers to be part of this skills gap and how this varies across occupations and industries. In addition, Pennsylvania's HPO process incorporates employer input on specific occupational needs. Consideration is also being given to expanding the HPO process to identify high priority skills or certificates.

Demographics – Pennsylvania's population is one of the factors impacting the skills mismatch in the state. The oldest cohort of workers from the baby-boom generation (individuals born between 1946 and 1964) turned 65 in 2011, and the youngest will reach that age in 2029. Normally, the increasing wave of retirements opens up opportunities for younger workers. The

current economic climate has resulted in many older workers choosing to remain in the workforce, thereby impacting the jobs' horizon for younger workers. However, baby-boomers will eventually leave the workforce, taking with them key knowledge, skills and abilities. As shown by the chart below, far fewer youth will be available to enter the labor market to replace these workers creating a shortage in the pipeline, especially in industries such as utilities, manufacturing and healthcare. This shortage is projected to manifest itself in the 15-year period between 2015 and 2029, during which more than 2.37 million people are expected to leave the labor force while only 2.02 million are projected to enter, leaving a cumulative shortfall in excess of 350,000.

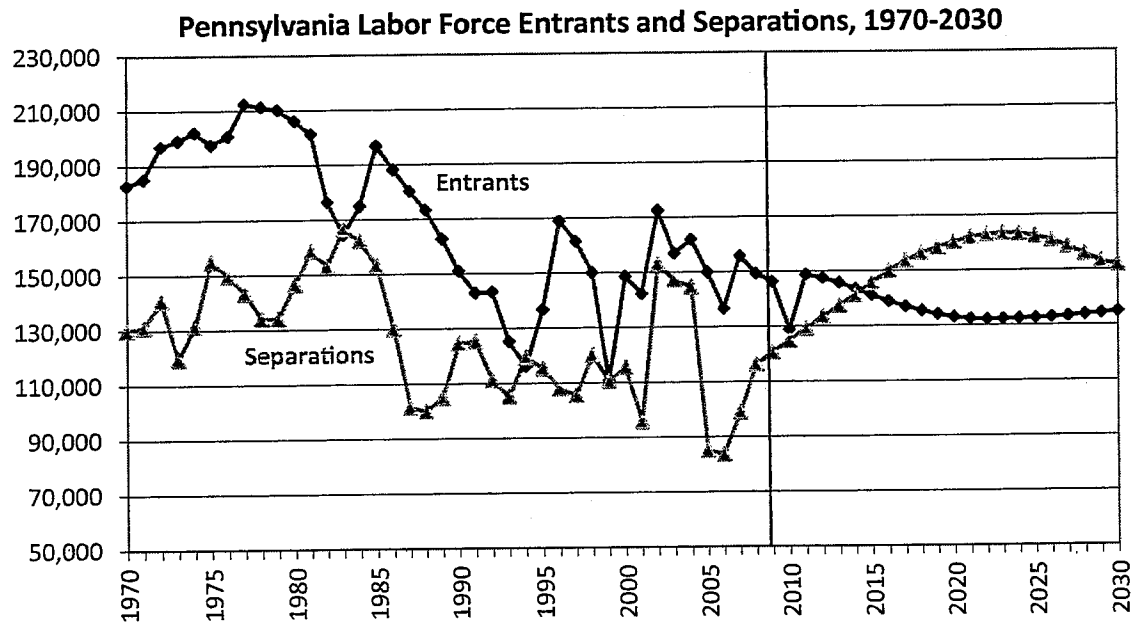

***Long-term* Unemployed** – The long-term unemployed, including entry-level and professional-level workers, have been detached from the labor force in excess of 26 weeks. Often, the skills they possess are not current or relevant in today's labor market, or they lack the education or credentials needed to find gainful employment. Some lack the resources or abilities to pursue relevant training or relocate to find employment, while others are waiting for opportunities paying wages comparable to their previous jobs.

In 2007, the long-term unemployed constituted only 15.2 percent of the unemployed. This increased to 40.2 percent in 2010, before falling to 40.1 percent in 2011. In the first quarter of 2012, this modest improvement continued as the percentage of the long-term unemployed fell to 37.0 percent. Even as unemployment has fallen, the problem of long-term unemployment persists.

Education – There are gaps in the alignment of academic coursework to career pathways in some parts of the K-12 system. Additionally, not all school personnel who assist students in decision making related to postsecondary opportunities have access to resources that provide

accurate information about jobs available in the labor market and the skills needed to obtain those jobs. Many graduates also lack general knowledge of what is expected in a work environment, commonly referred to as "soft skills."

Workforce System Design

The workforce system must serve an increasing number of customers with diverse needs while functioning with reduced resources. In response, Pennsylvania will upgrade system design, increase the use of technology and adapt to future changes in the economic environment. The commonwealth is increasing efficiencies by investing in new technologies that ensure the workforce system has the tools to produce successful job-seeker/employer linkages through appropriate and intuitive job matching. The workforce system will capture occupational and industry data to strengthen employer services to increase engagement, investment and commitment. System change will allow for a portion of resources, federal and state, to be repurposed in support of the Governor's vision.

L&I is supporting these design upgrades by performing a complete review of all department policies and procedures. Throughout PY 2012-13, the numerous guidance documents will undergo an in-depth review by internal and external sources, resulting in timely, effective and clear direction for the commonwealth workforce development stakeholders, staff and citizens.

Finally, L&I will review any US Department of Labor (USDOL) monitoring reports and use that guidance to further strengthen the commonwealth's workforce development programs and systems.

Strategy

The comprehensive workforce development strategy described in this plan will guide efforts to get Pennsylvanians back to work. JOBSFirst PA will address the existing disconnect between job creators and Pennsylvanians who are striving to attain family-sustaining jobs in the commonwealth. The ultimate vision of the governor, of which all goals below support, is a job for every Pennsylvanian that wants one. Four broad goals will drive the workforce development strategy:

Goal A: Develop a competitive workforce by building upon existing workforce development programs and strategies to ensure our workforce has the employability and occupational skill and education necessary to meet the current and future needs of employers.

Goal B: Better connect job seekers with employers using the most advanced technology and proven strategies.

Goal C: Build a pipeline of talent ensuring that the educational system is placing individuals in career pathways that lead to jobs projected to be in demand that pay family-sustaining wages.

Goal D: Build a strong fiscal foundation through restrained spending and fiscal management.

Goals and strategies were built on the coordinated efforts of the state agencies that provide workforce development services in consultation with the Governor's Policy Office and LWIAs. Much of this work was achieved through the Interagency Workforce Development Task Force consisting of policy and program staff from nine state agencies. The task force is described more fully in the operational portion of the state plan.

While the commonwealth will strive to better serve all Pennsylvanians, the workforce development strategy will put particular emphasis on five key populations identified in the Workforce Investment Act of 1998 (WIA):

- **Dislocated Workers:** The recession resulted in many dislocated and unemployed individuals. Many dislocated workers lost jobs in industries that have little or no potential to recover. Sub-groups of dislocated workers, including veterans, ex-offenders and persons with disabilities, will be targeted for the most intensive outreach.

- **Welfare Recipients:** The focus of the public welfare system is shifting to an employment first emphasis. Work preparation will become a means to an end (employment) instead of an end goal in and of itself.

- **Youth:** Recent graduates, both high school and college, continue to struggle to find employment. Job prospects are worse for high school dropouts. The unemployment rate among youth far exceeds that of any other age group. Disconnected youth, including high school dropouts and youth with disabilities, will also be targeted.

- **Incumbent Workers:** It is imperative that incumbent workers build upon their skills to allow for upward mobility. Moving incumbent workers up the career ladder and into career pathways will also create entry-level opportunities for dislocated workers and recent graduates. This process should include industry-recognized credentials that bear academic credit.

- **Older Workers:** The number of workers age 55 and over experiencing long-term unemployment has grown substantially since the recession began in 2007. Long-term unemployment can put older workers at risk of deferring needed medical care, losing their homes and accumulating debt. This raises concerns about older workers' reemployment prospects and future retirement income. Programs will provide skills training and incentives such as temporary training subsidies for employers to hire unemployed older workers.

Goal A: Develop a Competitive Workforce

The Corbett Administration has consistently heard from employers that the available workforce does not have the skills necessary to fill available jobs. As a result, the strategic focus will be on job training programs that are employer driven to ensure job training efforts meet the needs of the employer community and lead to jobs for those seeking work. Another criticism of the workforce development system is its complexity. The strategies outlined below aim to make the system easier to navigate and more effective and efficient.

1. Support Employer Driven Training Programs

To best allocate scarce resources, Pennsylvania will emphasize job training programs that directly lead to jobs. Training dollars will be spent on programs with proven results in High Priority Occupations (HPOs). Training programs that utilize a public-private partnership relationship will be encouraged in order to leverage additional resources. Improved and new employment programs and increased economic development activities will bolster efforts to return Pennsylvanians to work.

1.1. ***Keystone Works*** – is a program that will provide training opportunities for unemployed workers while at the same time incentivizing businesses to hire unemployed individuals.

1.2. ***Job Training Pilot Projects*** – will use existing workforce dollars to pilot new employer-driven training opportunities that have successfully transitioned programs to a public-private partnership model.

1.3. ***On-the-Job Training (OJT) Expansion Program*** – OJTs will offer employers the unique opportunity to offset initial training costs to fill skilled positions while building organizational productivity as the participant learns job essentials.

1.4. ***Welfare Employment and Training Initiatives*** – The Department of Public Welfare (DPW) and L&I will work collaboratively to integrate Employment, Advancement, and Retention Network (EARN) centers within PA CareerLink® offices. Through this partnership, comprehensive services will be delivered to all participants.

2. Evaluate System Activities and Share Best Practices
L&I will establish a more targeted approach to measure local program performance and improve and communicate promising practices, where appropriate. Outreach will include review of program effectiveness and staff development training programs.

3. Strategic Waiver Implementation
The commonwealth will continue to actively pursue waivers to eliminate statutory or regulatory barriers that preclude or limit the effectiveness of workforce development efforts.

4. Better Coordinate Incumbent Worker Training Programs
Commonwealth agencies will review program participation and performance as a basis for collaboration. By better defining the roles of the respective programs and decreasing duplication, available funds will be more effectively invested.

5. Ensure Alignment of Workforce Development Programs across Agencies
The governor's Interagency Workforce Development Task Force will implement strategies that streamline programs and improve the effectiveness and efficiency of systems and services.

Goal B: Better Connect Job Seekers with Employers
The workforce development system, most notably through the PA CareerLinks®, the one-stops for the commonwealth, has seen an influx of job seekers as a result of the Great Recession and subsequent recovery. In order to better serve job seekers and employers, investments in technology will be made to allow for more efficient self-service delivery mechanisms. This, in turn, will free up workforce development staff to devote more time to serving job seekers with more significant barriers to employment.

6. Implement a Comprehensive Job Matching System
Pennsylvania will offer a job matching system that provides specific information about job seekers, increases the quality and quantity of job postings, integrates with other job search systems and increases employer screening and recruitment capabilities.

7. Refine and Better Utilize the High Priority Occupation (HPO) List
L&I will review and refine the criteria used to determine HPOs in the summer of 2012 with an expectation of publishing the next HPO list by October 1, 2012. The data collected from the job

matching system will allow for robust, real-time supply/demand analysis to be conducted by the summer of 2013. These results will be used to further refine HPO policy and ensure training dollars are spent in areas with strong employer demand.

8. Enhance Workforce Development Services

Pennsylvania will transform the PA CareerLink® system through service delivery enhancements, including:

8.1. Developing a school-to-work network to keep graduates in Pennsylvania;

8.2. Launching of a Regional Reemployment Eligibility Assessment (REA) pilot project in the region served by the Scranton Unemployment Compensation (UC) Service Center; and,

8.3. Continuing to apply for grants and other funds needed to meet the workforce development objectives of the state, LWIAs, businesses and individuals.

9. Increase Job Placement of Individuals in Targeted Populations

The commonwealth will strive to exceed job placement requirements for targeted populations outside of the five key populations listed on page 7, particularly veterans, older workers, individuals with disabilities and ex-offenders.

9.1. ***Veterans*** – The civilian population of veterans aged 20 years or above increased from 965,000 in 2009 to 995,000 in 2010, before decreasing to 979,000 in 2011. The labor force participation rate of this group has hovered around 50 percent during this period, rising to 49.8 percent in 2011 from 49.0 percent in 2010. The labor force participation rate for veterans is considerably lower than Pennsylvania's overall rate. Total employment for this cohort rose from 444,000 in 2009 to 452,000 in 2011. However, relative to 2010, full-time employment rose by 2,000 while part-time employment fell by 4,000. In 2009, 40,000 veterans were unemployed, representing an unemployment rate of 8.3 percent, which was slightly higher than the Pennsylvania rate of 8.0 percent. However, veterans serving post-9/11 have an unemployment rate of 9.1 percent, which is higher than the rate for all veterans and all Pennsylvanians. In 2011, the level of unemployed veterans decreased to 36,000, or 7.3 percent which is below Pennsylvania's overall rate 7.9 percent. Veterans bring skills and experience to the workforce that should aid in the transition to the civilian workforce.

9.2. ***Older Workers*** – The number of Pennsylvanians age 65 and over was 1.9 million in 2009. The state's percentage of those aged 65 and over is the fourth highest in the nation (15.5 percent). Since Pennsylvania's population is only projected to grow by two percent over the next 10 years, the older worker must be factored into the commonwealth's workforce equation. While older workers contribute in many of Pennsylvania's industries, transportation, manufacturing, hospitality and recreation are

the industries that employ most of the commonwealth's older workers.

9.3. ***Persons with Disabilities*** – According to a 2010 Bureau of Labor Statistics report, only 21.8 percent of persons with disabilities are likely to be employed in the US labor force. Based on Cornell University's 2009 Disability Status Report, there were close to 300,000 working age persons with disabilities working in Pennsylvania. Another 55,000 were not working but actively seeking employment. Slightly over 200,000 persons with disabilities have some college or an Associate's degree, while approximately 85,000 have a bachelor's degree. As employers struggle to find workers and persons with disabilities look to enter the workforce or advance careers, Pennsylvania's workforce strategies must recognize this potential supply of workers as part of its workforce solution.

9.4. Ex-Offenders – Nine out of every 10 inmates in state prison will be released back into the community; nearly 44 percent will return to state prison within three years. The Pennsylvania Department of Corrections (DOC) is faced with the need to maintain public safety, cut costs and increase effectiveness in re-entry and community corrections. Employment is one predictor of recidivism. Research indicates that the sooner an ex-offender can obtain a job and the longer that ex-offender retains that job, the risk of recidivism decreases.

Goal C: Build a Pipeline of Talent

Two separate challenges warrant Pennsylvania's focus on building a talent pipeline. As indicated in the labor market section above, Pennsylvania is projecting a shortage of young workers to replace retirees from an aging workforce. The manufacturing, health care and energy/utilities sectors are expected to be particularly impacted by changing demographics. The strategies outlined below target those key industry sectors to mitigate long-term talent shortages. Additionally, data indicates that high school dropouts have substantially higher unemployment rates than their peers with a diploma, prompting the need for early intervention and re-engagement strategies.

10. Focus Education Standards to Ensure Students Are Career and Postsecondary-Ready

The Pennsylvania State Board of Education has adopted the PA Common Core Standards in English, Language Arts, and Mathematics. The PA Common Core standards are aligned with college and career expectations and were developed in partnership with Pennsylvania educators and with respect to the organization and design of the PA Academic Standards. In conjunction with additional PDE efforts, the PA Common Core Standards not only demand quality programs and rigorous instruction, but focus on ensuring that educational programs prepare Pennsylvania students to meet the needs, challenges and demands of any postsecondary environment.

11. Increase Awareness of Career Pathways to Youth, Parents, and Schools

Youth often make career decisions with little or no understanding of labor market realities. It is

critical that students, parents, teachers, counselors, and school administrators have access to quality data regarding career options and pathways. This includes expected job openings, average wages, required training/education, and job characteristics. Manufacturing and health care will be targeted in an effort to promote the quality jobs and career pathways available in those industries. The Energy Sector will also be targeted as a result of the enormous growth opportunities in the natural gas industry. The Department of Education and L&I will coordinate existing career resources to ensure consistent information is shared with stakeholders and efforts are not duplicated. Specific activities will include:

11.1. Expanding career pathways efforts statewide;

11.2. Supporting an "adopt-a-school" initiative where local businesses partner with school districts to promote job opportunities and career pathways. Partnerships may involve internships, mentorships, sharing of equipment, and access to plants and facilities;

11.3. Promoting public awareness efforts like the National Association of Manufacturers' "Dream It. Do It." and the Greater Reading Economic Partnership's "Careers in Two Years" campaigns focused on manufacturing careers; and

11.4. Recognizing LWIBs that have strong and effective relationships with career and technical education programs and sharing of best practices.

12. Increase Participation in Science, Technology, Engineering and Mathematics (STEM)
Pennsylvania's STEM initiative aims to increase student interest in STEM careers while continuing to develop effective strategies to retain, recruit and retrain the incumbent workforce in these critical fields.

13. Implement Pennsylvania Targeted Industry Program (PA-TIP)
The PA-TIP, administered by the Pennsylvania Higher Education Assistance Agency (PHEAA) provides need-based awards to students enrolling in certificate programs less than two years in length for certain HPOs in the energy, agriculture, and manufacturing clusters.

14. Dropout Prevention and Reengagement of Disconnected Youth
High school dropouts have an unemployment rate that is nearly double that of individuals with only a high school diploma. More than 21 percent of Pennsylvania teenagers failed to graduate with their class in 2010. If disconnected youth are not quickly reengaged, it can often lead to a lifetime of insufficient earnings, fewer job prospects and greater reliance on public assistance due to a lack of experience and marketable skills. The commonwealth will focus efforts on a strategy of both early interventions to prevent youth from dropping out and reengaging disconnected youth.

15. Youth with Disabilities
Early intervention for youth with disabilities increases the likelihood of successful transition to adult life, including the transition to higher education, independent living and work. The Office of Vocational Rehabilitation (OVR) begins working with students and their parents while the student is in high school to increase awareness of available employment-related services and to maximize the benefits of general and special education in the K-12 educational system.

Goal D: Build a Strong Fiscal Foundation
Research and experience show that fiscally well-managed states – those that constrain spending and reduce taxes – are also leaders in economic performance. The strategies outlined below will help to create an environment where economic opportunities abound.

16. Applying Business Principles and Disciplines
Fiscal management is important to the commonwealth's overall economic climate and image. An integral part of building a strong fiscal foundation is bringing a private-sector mindset to state government. Steps have already been taken to make government customer-focused, responsive and accountable to those it serves. This includes strategic technology solutions, permitting and regulatory reforms, and enhanced interagency cooperation. This transformation will be further enhanced by a strong commitment to job creators and by business-friendly tax reforms that will support economic development strategies for growing and attracting businesses.

16.1. ***Pennsylvania Inc.*** – Pennsylvania Inc. will transform state government into a partner in job creation. The initiative includes the Liberty Financing Authority, a one-stop shop for business financing. To provide a single face of government and a central resource and access point for job creators seeking information or transacting business with commonwealth agencies, the Department of Community and Economic Development (DCED) and the Interagency Coordination Advisory Group for Economic Development will be pursuing an initiative to improve the commonwealth's online portal.

16.2. ***Startup PA*** – Through collaboration with the Startup America Partnership, Startup PA will leverage national resources to supplement Pennsylvania's existing entrepreneurial initiatives.

16.3. ***Innovation Marketplace*** – The Innovation Marketplace portal will allow small companies to quickly find and investigate new technologies; startups to promote technologies to manufacturers and investors; and manufacturers to identify new customers and new markets.

16.4. ***Discovered in PA, Developed in PA (D2PA)*** – The D2PA program funds innovative proposals to promote entrepreneurship, increase technology transfer and commercialization of intellectual property, and enhance the capacity of economic

development service providers. It will build capacity to better support Pennsylvania businesses, as well as spur creativity and innovation in the provision of economic development services – from business incubation, to mentoring, to marketing and beyond.

16.5. Continued Investments – The commonwealth will maintain investments in proven innovation-focused economic development programs such as the Ben Franklin Technology Partnership and the Partnerships for Regional Economic Performance.

Desired Outcomes

Table 1 includes Pennsylvania's requested performance levels for WIA and Wagner-Peyser programs for Program Year (PY) 2012. The proposed levels were primarily based on current and past performance, Pennsylvania's labor market climate and regression model results. In most cases, the proposed levels reflect increases from PY2011 actual performance results and are at or above PY2011 negotiated levels. While the strategies and activities outlined in this plan will have a direct impact on PY2013 measures, the effect on PY2012 outcomes will be limited to work search requirements that became law in January 2012. The commonwealth anticipates a direct effect on the Wagner-Peyser program due to a significant increase in the number of participants but is uncertain on the impact to WIA programs at this time. As a result, Pennsylvania is conservative with the levels proposed for the employment outcome measures.

Table 1. State WIA/Wagner-Peyser Performance Indicators and Goals

WIA Requirement at Section 136(b)	Previous Year's Performance *(PY 2011)*	Proposed Performance Goals *(PY 2012)*
WIA Performance Levels		
Adults Measures:		
Adult Entered Employment Rate (EER)	73%	73%
Adult Employment Retention Rate (ERR)	82%	82%
Average Six-Month Earnings	$12,500	$13,000
Dislocated Worker Measures:		
Dislocated Worker EER	75%	75%
Dislocated Worker ERR	90%	90%
Dislocated Worker Average Six-Month Earnings	$15,750	$16,500
Youth Measures:		
Literacy Numeracy Gain	52%	55%
Placement in Education or Employment	58%	60%
Attainment of Degree or Certificate	65%	76%
Wagner-Peyser Performance Levels		
Wagner-Peyser EER	61%	61%
Wagner-Peyser ERR	86%	86%
Wagner-Peyser Average Six-Month Earnings	$13,000	$13,000

Table 2. Performance Targets for Jobs for Veterans (State Grant-Funded Services)

	Previous Year's Performance *(PY 2011)*	Proposed Performance Goals *(PY 2012)*
DVOP:		
Disabled Veteran Entered Employment Rate (EER)	52%	52%
Disabled Veteran Employment Retention Rate (ERR)	79%	79%
LVER:		
Recently Separated Veteran (EER)	60%	60%
Recently Separated Veteran (ERR)	77%	77%
DVOP/LVER Consolidated:		
Veteran (EER) – Weighted	59%	59%
Veteran (ERR)	77%	77%
Veteran Average Earnings (AE)	$14,500	$14,500
Performance Targets for One-Stop Services for Veterans		
Veteran EER	47%	47%
Veteran ERR	75%	75%
Veteran AE	$14,100	$14,100
Disabled Veteran EER	43%	43%
Disabled Veteran ERR	73%	73%
Disabled Veteran AE	$14,581	$14,581

Table 3. Senior Community Service Employment Plan (SCSEP) Core Performance Measures

	Previous Year's Performance *(PY 2011)*	Performance Goals *(PY 2012)*
Entered Employment Rate (EER)	42%	35.5%
Employment Retention Rate (ERR)	59.7%	58.4%
Average Earnings	$7,605	$7,439
Service Level	100%	150%
Community Service	50%	86.4%
Most-in-Need	2.46	2.41

Plan Development

Collaboration is critical to the workforce development planning process. The commonwealth promotes and nurtures alliances that result in a responsive, business-driven workforce and economic development system.

Policy direction and strategies are developed in collaboration with commonwealth stakeholders including the Pennsylvania Workforce Investment Board (PA WIB), economic development and educational entities, and the business community. These policies form the basis for this plan. The plan incorporates national direction and strategies to accomplish the governor's workforce development goals.

The plan was written and developed by administrative, field and management staff of L&I's Office of Policy & Planning, Bureau of Workforce Development Partnership (BWDP), CWIA, Office of Equal Opportunity (OEO) and OVR, as well as the PA WIB, LWIB executive directors, PA CareerLink® Administrators, the State Monitor Advocate, the Pennsylvania Department of Aging (PDA), the Department of Community and Economic Development (DCED), the Department of Public Welfare (DPW), the Pennsylvania Department of Education (PDE), the Department of Military and Veterans Affairs (DMVA) and the Department of Corrections (DOC). The parties represent each of the WIA partner programs described in the plan.

The Organizational Chart Key *(Appendix C)* addresses the commonwealth's efforts to coordinate workforce development strategies and the resulting policies that will lead to the implementation of these strategies. The Interagency Workforce Development Task Force is actively developing policies committing each partner to fully integrate programs that support workforce and economic growth.

The commonwealth will utilize a statewide approach to both strategy and implementation based on analysis that includes both state and local conditions and needs. It acknowledges that local officials develop local strategies that advance the state strategy while addressing the priorities and unique workforce development needs of the local area.

Local officials, as stakeholders, are involved in development of the state's vision and strategy. Multiple analyses of both the state and local conditions have been used to focus workforce development resources on areas of critical need. State strategies provide consideration and support for local workforce development strategies and programs.

Pennsylvania's state and local planning is a continual and collaborative process. Therefore, many of the ideas and promising practices identified at both levels have been included with the writing of this plan and have been crucial to strategy design of both the commonwealth's Integrated Workforce Plan and each of the Local Plans. This process allows for continual improvement in the commonwealth's workforce development system.

The commonwealth began the local planning process for the Local Plans by conducting a Local Plan Workshop at a statewide workforce development conference in May 2012. The workshop provided information about key elements for strategic development and offered an opportunity to provide short- and long-term input into the state plan development.

The PY 2012 – PY 2017 Local Plan guidance was issued to the Local Workforce Investment Boards (LWIBs) on August 15, 2012. Each LWIB was required to develop its plan in alignment with the commonwealth's *State Integrated Workforce Development Plan for WIA and Wagner-Peyser Act Programs 2012-2017*, and in accordance with the guidance provided.

Each of Pennsylvania's 22 LWIBs posted its plan for the required public comment period. During the public comment period, integrated teams review each of the plans and provide

recommendations to LWIBs. Integrated teams include staff from multiple BWDP areas responsible for performance, fiscal, oversight and grants administration of workforce development programs, including: WIA Adult, Dislocated Worker, Youth, Veterans Employment & Training, Trade, Rapid Response, WOTC, H-1B, NEG and Wagner-Peyser. Each team also includes representatives from: the Office of Policy & Planning, PA WIB, OVR, Aging, CWIA, OEO, and the State Monitor Advocate. The review teams ensure that local strategic and operational plans are aligned to the state plan and designed to meet each program's performance objectives. As each local plan is finalized, it will address public comments and the recommendations of the review teams. Each LWIB will then submit its plan for a final review and approval. Each LWIA will be required to have the approved Local Plan available on its public website.

The draft plan was posted on Pennsylvania's workforce development website for public comment from August 13, 2012, through August 27, 2012. Stakeholders were notified regarding the posting of the draft plan and the opportunity to comment. Public comments were received and addressed (See *Appendix A*). Pennsylvania's final State Integrated Workforce Plan for WIA and Wagner-Peyser Act programs for PY 2012 through 2017 was submitted to USDOL on September 14, 2012.

Section II – Operational Plan

1.0. Overview of the Workforce System

Introduction

Pennsylvania's State Integrated Workforce Plan for WIA and Wagner-Peyser Act Programs is Governor Corbett's approach for addressing economic and workforce needs in the commonwealth and is designed to move the state forward to fulfillment of that vision.

The Operational Plan details how Pennsylvania will realign existing systems and resources across agencies. Eliminating duplication will reduce program costs and extend the reach of workforce development services while providing an increased return on investment.

Organization

The commonwealth's workforce development system strategically incorporates multiple stakeholder goals to achieve the governor's vision. The Workforce Development System organizational chart is provided in *Appendix B*. The key components of the WIA-mandated workforce structure and functions are detailed in *Appendix C*.

The Department of Labor and Industry (L&I Organizational Chart) is the commonwealth agency that governs the overall workforce development system. L&I has designated the Workforce Development Deputate's Bureau of Workforce Development Partnership (BWDP) with coordinating and supporting the alignment of workforce programs and service delivery. To that end, BWDP provides:

- Oversight of the 66 PA CareerLinks® that connect job seekers with employers;
- Chartering and certification of 23 local workforce investment areas across the state;
- Guidance to 22 local workforce investment boards (LWIBs) on the development of local workforce plans to meet the state's vision and strategy;
- Policies and procedures to guide the overall workforce system; and,
- Technical assistance related to programming and the development of local initiatives.

The Pennsylvania Workforce Investment Board (PA WIB)

The PA WIB is the governor's employer-driven workforce development advisor for programs and policies under the authority of the WIA, and serves in an advisory capacity for the implementation of the governor's strategy. The PA WIB is successful in advisory capacities because it builds consensus at the statewide level and partners with LWIBs to do the same at the local level.

Prior to submission of the State Integrated Workforce Plan, PA WIB members reviewed and provided comment on the plan. Moving forward, the PA WIB will take an active role in the development and modification of the plan. The board will assume more directional input on program delivery, coordination with other agencies and organizations and development of special programs and initiatives used to solve unique workforce problems. By the end of 2014, the PA WIB should be fully immersed in the development and ongoing evolution of the state plan, both strategically and operationally.

The PA WIB is also reorganizing its committee structure to include fewer standing committees and more ad hoc committees. Once approved, the organizational structure will be provided to the USDOL through plan modification.

The PA WIB staff will deliver consistent, relevant information to members between official board meetings. Targeted communication between board meetings will allow more time during face-to-face meetings for a discussion of salient topics and the development of solutions. The increased communication will be accomplished through various methods including:

- The *PA WIB Update* – This document will provide a monthly review of WIB staff activity, messages from the PA WIB chair and director, links to websites for additional information and a board member spotlight section; and,
- Bi-monthly conference calls with the PA WIB – At least once between each full board meeting, the PA WIB staff will conduct a conference call with board members. These calls will help the board members understand the most relevant topics facing the PA workforce system and allow members to consider possible solutions to workforce issues.

The PA WIB will increase dialogue with other partners, such as LWIBs, through bi-monthly conference calls with the LWIB chairs, LWIB executive directors and staff and key state workforce agency staff.

The PA WIB Membership List is available on the PA Workforce website.

Local Workforce Investment Areas (LWIAs)

The LWIA system is a vehicle for employer-driven strategies and alignment of stakeholders with investments in the community. Information identifying Pennsylvania's LWIAs can be found in *Appendix P*, as well as WIIN No. 4-00: *Designation of LWIAs*.

The Local Workforce Investment Board (LWIB) in each area interacts across a broad spectrum of workforce, education and economic development partners to create a cohesive delivery system. It is the point of convergence for collaboration of existing stakeholder networks that will adapt and align for mutually beneficial purposes. Additional information about LWIBs' regional alignment is provided in *Appendix P*.

2.0. Operating Systems and Policies Supporting Workforce Strategies

Operating Systems Supporting Coordinated Implementation of Strategies

Pennsylvania's workforce development structure is coordinated at both the state and local levels to ensure collaborative planning and integrated service delivery.

SYSTEM	DESCRIPTION
Accountability	All programs and financial systems are monitored, including data validation and required single-audits, to ensure system integrity.
Common Data Collection and Reporting (Commonwealth Workforce Development System – CWDS)	The primary database and system of record, CWDS, tracks and records services, activities, and outcomes across multiple workforce development programs. Activities are recorded by funding stream, enabling the system to identify the resultant outcomes for each investment made. CWDS facilitates the implementation of seamless dual- and multi-program service delivery strategies, as customers provide intake information once to register for services while staff assign program enrollment and the funding stream(s) used to provide each service activity.
Communication	Communication systems inform and coordinate system-wide efforts. Various communication media and venues are used, including postal and electronic correspondence, policy and information websites, electronic and in-person conferences, seminars, and trainings to conduct outreach to consumers, customers, stakeholders and other audiences.
Evaluation and Analysis	CWIA uses data collected through CWDS to generate performance reports for programs and funding streams. The analysis allows partners to assess progress toward desired outcomes, evaluate the effectiveness of specific efforts and determine current needs. CWDS also collects data about educational and occupational background including demographical information.
Financial Management	The commonwealth's Office of the Budget provides oversight for all program funds and distributes funds to the appropriate agencies administering workforce and economic development programs.
Government	The Pennsylvania General Assembly has enacted amendments to the Pennsylvania Workforce Development Act to improve integration, program efficiencies and outcomes. Commonwealth training and information on records management and data security are made available to all workforce development partners. This ensures record availability for review and monitoring purposes as well as the safety and security of all records.

Professional Development	Pennsylvania provides an expanding curriculum of standardized courses, technical courses, conferences and workshops to workforce professionals in the PA CareerLinks®, LWIBs and partnering agencies and organizations. These opportunities promote collaborative and consistent service delivery through information exchange and learning.

Policies Supporting Coordinated Implementation of Strategies

All commonwealth workforce development policies aim to ensure directed use of resources, effective strategic planning and quality service delivery.

The Interagency Workforce Development Task Force is charged with the coordination and implementation of the state's workforce development strategies. The task force includes representatives of nine state agencies, all of which administer workforce development programs. The task force has mapped each program to identify and eliminate duplication and is exploring intersections where programs may be developed, leveraged, coordinated and more closely integrated.

The Interagency Coordination Advisory Group for Economic Development is tasked with improving cross-agency coordination and implementation of the governor's economic development priorities. To spur economic growth, job creation and business retention, the group will continue to:

- Facilitate interagency coordination of policies and programs;
- Increase agency understanding and usage of programs and policies;
- Integrate and reassess the commonwealth's economic development policies;
- Adhere to uniform standards for government accountability; and,
- Customize workforce development programs.

The commonwealth's training policies aim to ensure that training investments support targeted industries and provide training participants with the skills necessary to make solid connections to the labor market. Workforce and economic development policies are focused on industry clusters, cultivating and growing industries and networks of businesses with resources that are readily available.

Alignment of Delivery Systems to Jobseekers and Employers

The workforce development, education and economic development partners are tasked at the state and local levels to provide increased opportunities for career development, increased rigor in educational programs, STEM proficiencies, short-term and customized training, distance learning, and expanded programs for incremental achievement, such as 2+2+2 programs, to

ensure all Pennsylvanians have the skills demanded by industries. Additionally, improvements to Pennsylvania's job matching system, JobGateway(SM), are being launched to quickly and efficiently match workers to jobs.

The BWDP within the Department of Labor & Industry issues guidance to LWIBs for preparation of local workforce investment plans. Local plans are required to mirror the strategy and vision contained in the State Integrated Workforce Plan, and the local plan guidance sets forth clear expectations to ensure LWIBs meet USDOL criteria. BWDP provided clarification and planning assistance to LWIBs through a webinar and online correspondence. Plans are underway for an internal workgroup to make quarterly assessments of State Plan progress and future modifications. Any resulting LWIB plan modifications will be coordinated through BWDP.

BWDP also issues Workforce Investment Information Notices (WIINs) to guide and assist LWIB and PA CareerLink® staff in the provision of high-quality, integrated workforce development services to jobseekers and employers. Other WIINs provide processes and procedures to accurately and consistently document services to jobseekers and employers, as well as dual-enrollment strategies. The LWIBs have flexibility within these guidelines to develop local strategies, approaches and incentives to enhance customer services. The PA CareerLink® Partner Agreement is between the LWIB and the partners of the PA CareerLink® and specifies the duties and responsibilities of each partner in the system.

Service Integration

PA CareerLink® offices are the physical locations where, at a minimum, the core services of each WIA-mandated partner program are provided. Integration of PA CareerLink® service delivery is critical for effective and efficient service to customers. All partners have itemized the types and availability of services to be provided in the PA CareerLink® Partner Agreement.

Within the PA CareerLink®, program staff are aligned functionally, rather than by program. This alignment offers direct access to a broader range of services that can be adapted and leveraged to address each customer's unique needs.

Comprehensive PA CareerLink® offices use a triage approach to service delivery. Persons seeking assistance through the system can access core services online or in person. Staff are available to provide direct assistance to customers in both group and individual settings, and self-service resources are available in Career Resource Areas.

Appendix E provides a list of services that are captured and tracked in CWDS and *Appendix F* contains the PA CareerLink® Labor Exchange Policies & Procedures Manual.

Staff Development

L&I continues to expand its training curriculum for workforce development professionals to

meet three overarching goals: improving customer service; enhancing the quality of career development services; and achieving greater organizational integration so that PA CareerLink® service delivery is aligned, seamless and consistent. The curriculum offers training for front-line staff, supervisors, managers and administrators throughout the commonwealth's workforce development system, including PA CareerLink® and LWIB staff.

- PA CareerLink® 101 is a workforce foundations course required for all staff and partners in the PA CareerLink® system.
- PA CareerLink® 200-level courses are offered to appropriate staff based on job functions and responsibilities. Standardized offerings include: Labor Market Concepts, O*NET Basics, Effective Interviewing Skills, Case Management Basics, Introduction to Business Services and LMI for Business Services Teams.
- PA CareerLink® 300-level courses are provided to supervisors and managers. The four-part Leadership in Workforce Development series covers: Being a Leader, Handling Teams, Facing Challenges and Improving Processes, and Performing Well.

The commonwealth will continue to make extensive use of webinar technology as a means of communicating new and changing workforce system policies, training staff on procedures and providing a forum for workforce development leaders to share successful practices. Additional learning and developmental opportunities will continue to be made available for all levels of staff in the PA CareerLink® system.

Performance Accountability System for WIA Activities

L&I is responsible for administrative oversight of activities related to WIA, Wagner-Peyser, Unemployment Insurance, Trade Acts and the registered apprenticeship program; these share the same system of record, CWDS, to capture, track and report participant data. The accountability structure helps to ensure that the goals and policies of integrated service delivery are aligned both at the state and local levels, and the single data collection point through CWDS facilitates the quarterly creation of the Workforce Investment Streamlined Performance Reporting (WISPR) and Trade Activity Participant Report (TAPR) data files.

The WISPR system organizes a state's customer information to run day-to-day operations. It captures the minimum level of information collection necessary to comply with Equal Opportunity requirements, holds the commonwealth and grantees appropriately accountable for the federal funds received and allows L&I to fulfill its oversight and management responsibilities. Pennsylvania is one of only two states to pilot and fully implement this format.

The WISPR system features a standardized set of participant data based on a set of common measures defined consistently across programs, and it pulls aggregated quarterly reports for capturing services to employer and jobseeker customers, including a special report on services provided to eligible veterans and transitioning service members. The WISPR system ensures the integrity of reported data, thus resolving data collection and reliability issues raised by the

Office of the Inspector General and the Government Accountability Office.

In addition to being the vehicle to capture and report workforce program data, the WISPR is being utilized to analyze cross-program participation. The resulting information is being incorporated into reports that detail who is being served and by what programs, including the level of services being provided. This information is being combined with demographics of the participants to provide a complete picture of how services are being integrated across Pennsylvania and to whom they are provided. The WISPR will also be considered as a resource for other reports that may be conceptualized to assist the state and local workforce systems with their planning and operations.

Additional TAPR reporting elements will require programming changes in CWDS to capture the creation of Individual Employment Plans (IEPs) and to indicate training that results in an Associate's degree. These programming changes will take place in the fall of 2012.

An IEP will be required in CWDS for all Trade participants and will generate a labor exchange service. Training providers will be required to indicate expected outcomes of successful training completion, including all degrees, diplomas and certifications. Programming changes will be made in CWDS to allow a re-approval of the training application.

BWDP issued WIIN No. 1-11: *Workforce Investment Act of 1998 (WIA) Performance Incentive Award, Technical Assistance and Sanctions Policy* on July 15, 2011, providing guidance on Pennsylvania's incentives and sanctions policy for WIA common measures performance. The WIIN identifies the criteria for granting incentive awards to LWIBs, the minimum levels of acceptable performance and actions that may be taken if LWIBs fail to meet established performance criteria. This WIIN reinforces Pennsylvania's commitment to implement and oversee statewide administration and program operations that promote high levels of coordination among all partners and resources, as well as programmatic performance to ensure taxpayers receive an effective return on their investment. The policy aligns with USDOL policies for incentives, sanctions and performance improvement.

WIIN No. 2-00: Change 2, *Financial Management Technical Assistance Guide (TAG)* provides operational guidance, strengthens fiscal accountability and provides necessary information for analysis, monitoring and evaluation of the commonwealth's workforce development system as it pertains to WIA. The TAG requires LWIA fiscal agents to report financial expenditures monthly. BWDP staff conduct regular, periodic on-site monitoring and data validation in each LWIA.

Additionally, WIIN No. 3-00 Change 2: *Local Area Monitoring Guidelines* ensures that LWIBs and their Youth Councils provide the monitoring, oversight and evaluation necessary to ensure compliance with WIA, federal regulations and state policies. The WIIN also ensures continuous improvement and the provision of technical assistance as needed.

Common Data Collection and Reporting Processes

CWDS was the first system in the country to capture and report on multiple programs from one source. It is the single system-of-record for multiple programs across multiple organizations, including LWIAs, BWDP, CWIA, OVR, and the Department of Public Welfare (DPW).
CWDS supports all major processes, including intake, enrollment, assessment, eligibility determination, plan development, service provision, service tracking, job placement, job retention, case closure and financial management components of employment and training programs. Additionally, it records and tracks services and outcomes for customer groups, such as dislocated workers, unemployed, youth, older workers, veterans and welfare recipients. CWDS provides or facilitates on-line services to employers and jobseekers, a record of service delivery activities, performance management, financial management, information about available training, and other programs and linkages to other resources and information.

Employers and training providers maintain business folders within CWDS that enable them to post jobs and submit applications to be considered for the state eligible training provider list (for WIA and Trade Act participants) or for the Work Opportunity Tax Credits (WOTC) program. CWIA uses CWDS to capture federally required New Hire data.

Service activity for PA CareerLink® program participants is captured by funding source, and staff can track a participant's service activity across multiple programs (e.g., Wagner-Peyser, Trade). This enables staff to better coordinate services, activities and IEPs within the PA CareerLink® system.

Planned enhancements to CWDS will record and track: completion of Trade re-adjustment allowances; IEPs; attainment of certifications, diplomas, and Associate's degrees; and crosswalks and portals to improve job matching and to provide a more customer-friendly interface. One such crosswalk provides immediate referral of unemployment compensation claimants to the services of the PA CareerLink® system.

Strategies for Using Quarterly Wage-Record Information

Pennsylvania uses state unemployment insurance (UI) wage-record information to calculate and report on all of the employment-related common performance measures. Pennsylvania also participates in two data-sharing agreements, the Wage Record Interchange System and the Federal Employment Data Exchange System. These systems provide access to wage-record information for the other 49 states, as well as federal civilian employees and military personnel.

All sources of wage-record data are compiled by L&I's Office of Information Technology (OIT) and populated into the WISPR to compute and report performance for multiple workforce programs. Primary access is granted to CWIA and OIT staff to pull the data and calculate the performance measures. Secondary access is granted to BWDP staff to conduct annual data element validation reviews.

In addition to the statewide WIA Title I Performance Report, each LWIA is provided with quarterly local performance results, as well as participant-specific reports that illustrate the pool of people included in the performance measure(s). Though wage-record data are used for these local reports, the wage data are always aggregated; individuals are not identified.

3.0. Business Engagement

Although Pennsylvania's 23 LWIAs are too diverse to establish a "one-size-fits-all" model for business services, most PA CareerLink® Business Service Teams (BSTs):

- Receive and use policy guidance from the LWIB;
- Establish a point-of-contact role for direct employer relations;
- Disseminate labor market information, services and assistance; and,
- Resolve service issues related to job postings.

Teams set outreach and engagement goals based on strategic direction provided by the LWIB; statewide, regional and local targeted industry clusters; and statewide and regional High-Priority Occupation (HPO) lists. BSTs may also use employer databases, such as the database maintained by CWIA, to identify labor market penetration rates by industry and industry cluster to assist in setting goals.

When using measure- and data-based practices as above, BSTs achieve efficiencies in networking and relationship building with the business community, expand productivity and/or profitability for the business or industry and increase opportunities to leverage the resources of the employer community. Effective employer engagement enhances a BST's opportunities to connect jobseekers to employment that provides a family-sustaining wage.

The Business Engagement Initiative, funded by USDOL, has provided valuable insights into ways in which the commonwealth's workforce development system can guide improvements at the local level. The initiative included employer surveys and interviews, focus groups, and "mystery shopping" of randomly-selected PA CareerLink® locations. Following an in-depth review of the results, Pennsylvania will establish a workgroup to propose possible improvements to BSTs in PA CareerLink® offices.

Planned Improvements to Business Services

Pennsylvania's workforce development system is using resource mapping, increased communication and collaborative strategies to leverage programs and resources to meet the needs of the business community. Occupational and industry data can be better used to coordinate and target services to businesses.

Table 3.1 outlines L&I's plans to address the challenges associated with PA CareerLink® Multi-Partner BSTs:

Table 3.1. Challenges Inherent to Multi-Partner Business Service Teams

CHALLENGE	STRATEGY
BSTs must maintain knowledgeable staff to communicate the value of PA CareerLink® services to businesses, other business outreach teams and community organizations.	PA CareerLink® staff and LWIBs will receive ongoing training in business services-related topics, as well as resources, to ensure a high level of proficiency in BSTs.
CWDS is effective for posting and tracking job openings, but it cannot capture outreach to potential employers.	The commonwealth will develop a mechanism and process for capturing value-added services to businesses.
Although labor market penetration measures business engagement, it does not provide data on the quality of services or service delivery.	The commonwealth and LWIBs will identify and implement quality-of-service benchmarks.
Surveys of customer satisfaction are not conducted on a regular basis; and it is difficult to quantify results.	LWIBs and BSTs will implement a system to measure business satisfaction on a consistent basis.
Customer needs must be clearly communicated upstream, downstream and across networks to ensure effective outreach planning and implementation.	The commonwealth, LWIBs and BSTs will design effective communication mechanisms.

LWIBs and the PA CareerLink® offices, including the BSTs, will be encouraged to provide employers with workforce-related program information from other agencies and organizations. The commonwealth will provide guidance to LWIBs and BSTs to incorporate this information into briefings, portfolios and marketing materials. Workforce program information may include, but not be limited to:

- **Liberty Financing Authority,** which makes a range of tools available to businesses to foster growth and innovation, in turn promoting job creation; and,
- **Workforce Leadership Grants,** regionally-funded grant projects that rely heavily on LWIBs to identify the emerging skilled-technology needs. Educators from two-year and four-year institutions work collaboratively with the regional emerging industry representatives to develop curricula that reflect needed skill sets.

Additional Resources and Benefits Provided to Employers

Business services include the posting of job openings, reviewing applicants' resumes and requesting referrals. Employers may also have applicants pre-screened, participate in job fairs and special recruitment events, access labor market information (LMI) and other data and receive Customized Job Training (CJT) for incumbent workers.

Pennsylvania's new JobGateway(SM) works to match employers to jobseekers through an improved, business-friendly web portal. To develop the portal, the Unemployment Compensation and Workforce Development deputates within L&I coordinated strategies for the new system. The commonwealth surveyed employers to determine how CWDS' job matching feature was being used and to identify desired functionality. Meetings were held with key business representatives from high-growth industries with multiple job postings to determine how they recruit talent and how the commonwealth might assist in recruitment efforts.

The new system is being implemented in a phased approach. The first phase is already accepting input from unemployment compensation claimants that are using the system to not only sign up for benefits, but also to perform required job-search functions. The second phase, scheduled for fall 2012, will relocate previous job seeker accounts from the current job matching system to JobGateway(SM) and will allow for a new job search engine and job subscription service. The final phase, scheduled for spring 2013, will improve the employer job-match functions to pull the whole system together. Employer input will remain critical in the ongoing development of JobGateway(SM).

Other programs to engage and assist businesses include:

- ***Keystone Works,*** an initiative to connect Unemployment Insurance (UI) claimants with businesses in need of skilled employees. To participate, businesses will submit training plans for open positions to be pre-approved by L&I. The business then provides training, not to exceed 24 hours per week for up to eight weeks. Claimants will continue to receive UI benefits during the training period. Employers who hire participants upon completion of the training period will be eligible to receive a $375 incentive payment every four weeks that the individual remains on the job full-time, up to $1,500 in total incentive payments.
- ***On-the-Job Training (OJT),*** which provides 50-90 percent reimbursement to employers (based upon a sliding scale) for wages paid to participants during the training period.
- ***Work Opportunity Tax Credits (WOTC),*** tax credits to employers for wages paid to individuals from targeted populations.
- ***Small Business Procurement Initiative***, launched in July 2012, designating a portion of state government contracts for companies with 100 or fewer employees that do not exceed established revenue ceilings. Allowing these small businesses to compete for contracts will, in turn, provide opportunities for them to add to their labor force.
  Strategic Early Warning Network (SEWN), a program managed by the Steel Valley Authority, offers layoff aversion services to manufacturing companies, upon request, at no cost. Core services include financial restructuring, operational restructuring and cost management, ownership transition, high performance workplace strategies and new market opportunities.

4.0. Services to State Targeted Populations

Targeted Populations

Policies for Serving Targeted Populations

State and Local Priority of Service policies ensure that, when program funds are limited, funds will be applied to serving veterans and other individuals with barriers to employment. The Veterans Priority of Service and Local Priority Policy Guidance can be found in *Appendix G*.

Universal Services and Accessibility

Each PA CareerLink® office ensures compliance with all provisions of the Equal Employment Opportunity (EEO) Program and locations are required to pass EEO/ADA accessibility requirements. Each site is equipped with assistive technologies for use by persons with disabilities and/or other limitations. Source materials are available in multiple formats and in languages appropriate for the local population. Bilingual staff are available, and each location has access to Language Line services, a telephone service providing immediate interpretation in multiple languages. Other auxiliary aids and services will be made available upon request to individuals with disabilities.

Incentives to Train and Hire Targeted Populations

Special recruitment and outreach are conducted to ensure that veterans, targeted populations and those with special needs are informed of the services available through PA CareerLink® offices. To promote the hiring of individuals from targeted populations, workforce development partners will present information about return on investment and other benefits of employing such individuals, including WOTC and partial reimbursement for wages paid to workers in training.

Pennsylvania requested a modification to the previously-approved waiver that provides for the use of a sliding scale for On-the-Job Training (OJT) employer wage reimbursement. The modification seeks to provide an additional 10 percent reimbursement to employers who contract to provide OJT opportunities to individuals who are veterans and those with significant barriers to employment. The waiver request can be found in *Appendix O*.

Pennsylvania has successfully connected long-term unemployed dislocated workers to training and jobs that pay family-sustaining wages through the National Emergency Grant (NEG) funded OJT program. Approval of the waiver will allow WIA formula funds to be used to extend such opportunity to all targeted populations.

Veterans

Upon contacting a PA CareerLink® office, veterans and covered persons are notified of their priority status as outlined in the Memorandum of Understanding (MOU) between the commonwealth and USDOL-VETS. Local Veterans Employment Representatives (LVERs) and Disabled Veteran Outreach Program (DVOP) staff work with their PA CareerLink® partners on a common strategy for identifying veterans in need of services. Further, LVER and DVOP staff work with PA CareerLink® partners to provide employment, training and supportive services to veterans residing throughout the commonwealth.

LVERs provide employment and training services to veterans and other eligible persons considered "job-ready" and work with employers to develop jobs for veterans and other eligible persons. DVOP staff work with disadvantaged veterans having barriers to employment and those in need of case management for intensive services.

The commonwealth is coordinating the following initiatives to promote services for veterans:

Unemployment Compensation for Ex-Military (UCX) Pilot – Pennsylvania was asked to participate in a UCX pilot project to identify UCX claimants and provide additional information about services offered at PA CareerLink® offices. There are approximately 300-400 UCX financial determinations issued per month in Pennsylvania. Coordination among UC, CWIA and BWDP will help identify and track UCX claimant activities and provide information on the success of this effort for veterans.

Veterans Retraining Assistance Program (VRAP) – This program will pay for up to 12 months of training in a high-demand occupation for unemployed, eligible veterans between the ages of 35 and 60. Upon completion or termination of training, follow-up activities will be conducted. The veteran must be contacted within five working days to expedite the employment process and the veteran will be contacted at least once every two weeks after initial contact until employed.

Gold Card Initiative – When a veteran identifies him/herself as a "Gold Card" veteran, s/he will receive enhanced intensive services. The assigned PA CareerLink® case manager will meet with the veteran a minimum of twice within the first 30 days, then at least once every 30 days for six months or until the veteran is employed. All services, contacts or attempts to contact are documented in CWDS.

Services for UI Claimants and Dislocated Workers

Reemployment services offered through PA CareerLink® offices are available to all UC claimants. Information about reemployment services and instructions for enrollment are printed on the claim confirmation letter.

Pennsylvania implemented a formal work search requirement for UI claimants effective January 2012. Pennsylvania UC law now requires claimants to register for employment search services with the PA CareerLink® system within 30 days of filing for benefits and to maintain records of active work-search efforts, which include applying for two positions weekly. Beginning the ninth consecutive week of benefits, claimants must apply for at least three positions and may have to expand their job search to include positions that would provide suitable employment they are capable of performing.

When a claimant registers for benefits, s/he is immediately directed to JobGateway(SM), where occupational skills information are collected. The new portal matches the claimant's skills with those required for jobs posted in CWDS and helps satisfy job-search requirements. Claimant participation in reemployment services is tracked until exhaustion of UC benefits or termination of reemployment services. Service outcomes, including work test failed actions, are recorded in the CWDS jobseeker activity log, and a policy regarding the reporting of outcomes to the UC Service Center has been provided to PA CareerLink® staff.

In addition to PA CareerLink® services available to all jobseekers, there are several additional programs to assist UI claimants and dislocated workers.

Profile Reemployment Program (PREP) – PREP is Pennsylvania's worker profiling/ reemployment services collaborative program to expedite reemployment services for UI claimants while eliminating duplicative services. The database systems rank claimants according to those most likely to exhaust their UI benefits before returning to work. The ranking algorithms, based on common characteristics found in similar unemployed workers (such as employment history and/or educational levels), exclude claimants with a recall date, union affiliation, those involved in a work stoppage and claimants who are working part-time. Collaboration among PA CareerLink® partners makes PREP an effective gateway for UI claimants to obtain reemployment and training services across all service levels, including (for example) orientations; job search planning, assistance, and workshops; LMI; résumé preparation; program assessment; vocational and career guidance; testing; remedial or prerequisite training (e.g., GED or ESL); and skills training. All PREP customers receive an employment needs assessment and develop an employment plan. Participation in PREP is tracked through CWDS until exhaustion of UI benefits or termination of reemployment services.

Reemployment and Eligibility Assessment (REA) Program – The Middle Class Tax Relief and Job Creation Act of 2012 extended the federal Emergency Unemployment Compensation (EUC) Program through 2012, adding a new requirement for individuals receiving EUC benefits to participate in a reemployment and eligibility assessment (REA). The assessment provides EUC claimants with information to assist them in reconnecting to the labor market and includes a review of the claimant's eligibility for EUC benefits. The commonwealth was able to quickly implement REA activities for recipients of EUC by adapting and refining systems, materials and services previously developed for PREP.

In PA CareerLink® centers, staff – most prominently WIA Titles I and III partners – were trained on REA and tasked with modifying PREP orientation materials to reflect REA requirements. Staffing and facility resources, some originally scheduled for PREP activities, were redirected to REA service delivery. To meet increased traffic and demand, additional sessions of group workshops, including those on soft skills, résumé-writing, interviewing skills, transferable skills, job clubs and accessing intensive and training services, were developed and conducted. PA CareerLink® staff spend countless hours coaching customers about the criticality of identifying and applying past experience and expertise – their transferable skills – to new opportunities. REA implementation is providing staff with the opportunity to modify and integrate programmatic (e.g., assessment, IEP, and tracking) as well as logistic (e.g., resource deployment) PREP expertise to REA activities. The "lessons learned" from this concerted effort will, undoubtedly, prove beneficial to customers served by future initiatives.

In September, 2012, Pennsylvania begins implementation of the federal UI REA pilot program with regular (not EUC) UI claimants. L&I's Office of Unemployment Compensation Benefits (OUCB) selected the region served by a Unemployment Compensation Service Center in the northeast area of the commonwealth; claimants will work with PA CareerLink® staff in Hazleton, Tannersville, Scranton, and Wilkes-Barre. Partnering with Unemployment Compensation and the Center for Workforce Information & Analysis for identification and selection purposes, BWDP staff will provide REA services to 2,100 claimants during the grant period. REA is more intense than the services offered through EUC/REA, and claimants risk being ruled ineligible for continued benefits if they fail to participate. Therefore, while claimants will receive services similar to those afforded claimants through PREP, REA claimants will be closely case-managed, including development of a rigorous Individual Employment Plan (IEP).

National Emergency Grants (NEG) - Pennsylvania pursues NEGs to expand Rapid Response and Dislocated Worker services for those affected by disaster, mass layoffs and plant closings when appropriate.

OJT Expansion Program – Pennsylvania will continue to strengthen the OJT program, which connects employers who are willing to train new workers with long-term unemployed dislocated workers. During the training period, which may last no longer than six months, employers may be reimbursed as much as 90 percent of wages paid to the training participant. A partnership among L&I, LWIBs, Industry Partnerships, educational and training providers, community and faith-based organizations, business associations, economic development and labor organizations is identifying OJT opportunities in high-priority occupations.

Keystone Works – The Keystone Works program is described in Section 3.0 of the plan.

Job Training Pilot Projects – L&I formed an internal team to develop employer-driven training and hiring pilot programs. One such pilot will provide a financial incentive to LWIBs and selected Pennsylvania employers that agree to hire individuals who complete specific training

programs. Through this program, when an employer agrees to pre-select a candidate for an existing position and then hires that candidate upon the successful completion of a training program, additional training funds will be provided to the LWIB. Another pilot calls for the use of mobile training units to provide skills training in manufacturing occupations, including welding and machining.

Migrant and Seasonal Farmworkers (MSFWs)

Information about services for MSFWs can be found in Section 5.0 of the plan.

Ex-Offenders

The commonwealth's Department of Corrections (DOC) offers computer literacy training and courses that lead to potential certifications in occupational skills training, with a focus on high-priority occupations. The Department of Education's Adult & Basic Literacy Education (ABLE) program provides literacy education, including GED and other remedial training, during incarceration. Inmates are also given the opportunity to gain experience by working in prison.

DOC, the PA Board of Probation and Parole (PBPP), and PA CareerLink® partner programs, such as ABLE, WOTC and Federal Bonding, will continue to work to transition ex-offenders to productive lives after prison by coordinating a continuum of services. This starts in the State Correctional Institution (SCI), progresses through Community Corrections Centers (CCC) and concludes with local PBPP staff and PA CareerLink® offices to make a connection to family-sustaining employment for the ex-offender.

PA CareerLink® offices near the 26 SCIs provide orientation sessions during the DOC's Community Orientation and Reintegration (COR) training. When inmates reach the CCCs, they are expected to register in-person at the PA CareerLink® office within the first week. CCC and PBPP staff help the participants secure housing and re-establish family relationships. At the PA CareerLink® office, participants and staff develop an IEP. The PA CareerLink® partners will continue to promote the Federal Bonding Program (FBP) and the WOTC program to employers as incentives for hiring ex-offenders.

Additionally, DOC is developing a strategic plan to address re-entry and workforce issues impacting ex-offenders. Part of that strategic plan calls for the establishment of a statewide Re-entry Task Force to include workforce development partners.

Individuals with Limited English Proficiency

In accordance with Title VI of the Civil Rights Act of 1964, the commonwealth strives to provide meaningful access to services to all individuals with Limited English Proficiency (LEP). This includes the traditional services offered by PA CareerLink® offices and additional services such as English for Speakers of Other Languages (ESOL) classes provided by ABLE and other partners.

Some LWIBs also offer job-readiness and a limited number of occupational skills trainings in alternate languages. The LEP program is monitored on an annual basis to assess the current composition of its service area, the current communication needs of applicants and clients and whether existing assistance is meeting the needs of LEP individuals.

Individuals Needing Basic Education Skills

The commonwealth's Division of Adult Education in the Department of Education offers a full range of instructional services to adult Pennsylvanians looking to develop the basic skills necessary to participate fully in the education of their children, find and keep family-sustaining employment or obtain a secondary school credential. The Division of Adult Education also monitors GED testing, provides professional development for adult education and family literacy program administrators and teachers, and provides training for volunteer tutors of adult education.

Local basic education providers are PA CareerLink® partners, often having staff in the PA CareerLink® offices. Some areas in the commonwealth have high numbers of individuals who never completed high school or earned a GED; others who never took or completed the algebra classes necessary for entry into many postsecondary programs. During the development of an IEP, these individuals are referred to the Basic Education provider, who can assist individuals with completing proficiencies to earn a GED. The Basic Education providers also incorporate algebra, contextualized reading, communication skills, note-taking, study skills and other skills valuable to a lifelong learner into the Basic Education curricula.

Simultaneously, some training providers have incorporated basic education components into occupational skills training to further help individuals become employed in high-priority occupations.

Welfare

Services to low-income individuals, including homeless persons, are coordinated and braided to provide the appropriate combination of assessment, career development, employment, supportive services, basic skills, readiness skills and/or occupational skills necessary to enter into career pathways.

DPW is refining and integrating its employment efforts to ensure that clients in the public welfare employment and training system are tracked according to levels of employability and matched to the most appropriate service for their individual needs. Beginning in 2012, the Department of Public Welfare contracts will be designed so that Employment, Advancement, and Retention Network (EARN) centers will be reimbursed based on their ability to successfully help welfare recipients find jobs and attain independence. DPW's new performance-driven contracts will provide flexibility with an incentive structure to ensure taxpayer money will be expended prudently.

Older Workers

Older workers served by Pennsylvania's workforce development system include incumbent workers whose current employment does not generate sufficient income, long- or short-term unemployed workers, displaced homemakers, those receiving survivor's benefits and retirees who need to supplement retirement income.

Long-term unemployment and insufficient income can place older individuals at risk of deferring needed medical care, losing their homes, accumulating debt and substantially diminishing future retirement income. In response, Pennsylvania will continue to pursue a modified OJT Waiver so that OJT NEG and SCSEP programs (described in Part 6.0) may continue to offer incentives to employers for hiring older workers.

Individuals Training for Non-traditional Occupations

The Pennsylvania Department of Transportation (PennDOT), in partnership with L&I, will provide an on-the-job training/supportive services initiative that offers highway construction industry skills to returning veterans, minorities, women and the economically disadvantaged to increase their participation in the workforce. The project incorporates basic education skills and GED preparation for participants with no high school diploma. Supportive services, such as child care, transportation and appropriate construction attire, may be provided upon training participation. The program also provides participants with construction tools and equipment to support their continued employment.

Persons with Disabilities

L&I provides for the promotion and development of employment opportunities for persons with disabilities through PA CareerLink® offices using cooperative practices with OVR and local County Human Services Offices of Mental Health and Substance Abuse, and Developmental Programs administered by DPW. As a PA CareerLink® partner, OVR helps identify and serve eligible persons with disability-related barriers to employment. Services are determined on a case-by-case basis. OVR services are provided at no cost to the individual. Vocational Rehabilitation Counselors provide a vocational evaluation to develop an Individualized Plan for Employment (IPE) outlining vocational objectives, services, providers and responsibilities of the participant.

To support its long-term strategy of improving services, OVR fosters interagency collaboration with all federal and state disability employment agencies and organizations that serve individuals with disabilities. In addition, OVR works with stakeholder groups such as the Pennsylvania Rehabilitation Council, the Statewide Independent Living Council and the Pennsylvania Initiative on Assistive Technology to supplement services. The Governor's Cabinet and Advisory Committee for People with Disabilities will monitor the hiring, retention and promotion practices of commonwealth agencies regarding employment of individuals with

disabilities.

The Priority and Eligibility Policy for Individuals with a Disability can be found in *Appendix G*.

Promoting the Hiring of Persons with Disabilities

OVR engages in a strategic public outreach campaign to make employers aware of the benefits of hiring individuals with disabilities and offers interested employers no-cost business solutions including:

- Information regarding OJT reimbursement;
- Information about tax credits available to employers;
- Evaluation and preparation of potential job candidates;
- Referral of qualified, pre-screened individuals to a business or public employer;
- Consultation services to help retain current employees; and,
- Accommodation solutions for new or current employees, including performance of job analysis and worksite modification consultation, along with information about assistive technology and available resources.

Business services are offered through the use of placement counselors at each of OVR's 16 regional offices. Additionally, the Bureau of Blindness and Visual Services has a single point of contact for businesses in six of the regional offices. OVR adheres to a strict performance measure, responding to all employer inquiries within 48 hours of contact.

OVR collaborates with LWIBs, PA CareerLink® business service teams, the Council of State Administrators of Vocational Rehabilitation (CSAVR), VR National Employment Team (VR NET), local Chambers of Commerce, Society of Human Resources Managers (SHRM) chapters and the PA Business Leadership Network (PA BLN) to initiate and sustain relationships with businesses and non-profit organizations that hire individuals with disabilities. To increase engagement, best and promising practices will be promoted in the business and provider communities. Employment summits that bring together businesses and interagency resources will also be a part of overall outreach efforts.

Accessible PA CareerLink® Services

L&I mandates that all PA CareerLink® offices provide reasonable accommodations, reasonable modifications, architectural accessibility, programmatic accessibility, and CWDS website accessibility for persons with disabilities. Each office is equipped with assistive technologies and accessibility features including a computer with common accessibility devices such as JAWS, Zoom Text, enabled sticky keys, modified keyboards and other input devices. Staff are trained on the maintenance and operation of available assistive technology devices.

PA CareerLink® staff receive refresher training on disability awareness, sensitivity and etiquette, outreach for employers and guidance concerning Social Security and related topics. Each office is required to develop an Enhancement Plan for providing services to persons with disabilities. On-site accessibility reviews are conducted by L&I staff representing OVR, the Bureau of Occupational and Industrial Safety (BOIS), and the Office of Equal Opportunity (OEO). If appropriate, a corrective action plan is prepared to address deficiencies. No office can be chartered or re-chartered without a successful compliance review.

To further ensure OEO/ADA compliance, the commonwealth conducts an annual monitoring visit of LWIB oversight systems. The monitoring is conducted in compliance with sections 183-185 of WIA and WIIN No. 3-00, Change 2, Local Area Monitoring Guidelines.

CWDS offers a variety of resources and information on services available to persons with disabilities including: information on training opportunities and links to online training; technology guides for using screen enlargement software, screen reading software, Windows Accessibility features, and the Text Telephone or Teletypewriter for the Deaf (TTY); information on the ADA and accessibility; alternate format handbooks; links to service providers and resources to assist persons with disabilities in removing barriers to employment; and links to information for employers interested in hiring a person with a disability including tax benefits, the ADA and accommodations.

Delivery of Comprehensive Services for Eligible Youth

The commonwealth will continue to develop a pipeline of talented, well-prepared young people ready to step into the workforce. Organizations involved in the coordinated delivery of services to youth include local educational institutions, adult education agencies, county welfare offices, juvenile justice and local law enforcement agencies, local housing authorities, rehabilitation agencies and other community- and faith-based organizations. The Youth subgroup of the commonwealth's Interagency Workforce Development Task Force will assist in identifying gaps in service and streamlining processes in order to eliminate barriers that can prevent young people from attaining self-sustaining employment.

Pennsylvania will focus on ensuring students are career and postsecondary-ready; increasing public awareness of career pathways; increasing participation in STEM; implementing a targeted industry program; addressing dropout prevention and the reengagement of disconnected youth; and serving youth with disabilities.

The braiding of WIA Title I funded programs with other youth-directed state and local entities allows comprehensive services to be offered to all eligible low-income populations under WIA. Available TANF funding will continue to support WIA year-round services and summer employment activities. BWDP will advocate for the continued coordination of summer work experiences for youth on public lands, particularly with LWIAs in proximity to federal sites.

L&I will reevaluate and update its existing WIINs on youth policies during PY '12 and PY '13, as well as continue to monitor progress toward meeting and/or exceeding state and local WIA negotiated performance levels.

The commonwealth will measure the effectiveness and progress of new and existing Youth programs through monthly expenditure, performance, and other reports, monitoring and the performance accountability system.

Focus Education Standards to Ensure Students Are Career- and Postsecondary-Ready

L&I will partner with the Department of Education to ensure that local youth providers are equipped to support and implement the PA Common Core Standards for English, Language Arts and Mathematics so that Pennsylvania's young people have both the technical and soft skills that employers look for when making hiring decisions.

Increase Awareness of Career Pathways to Youth, Parents, and Schools

The commonwealth continues to promote career pathways through internships, job shadowing, mentoring, work-based learning opportunities, Career & Technical Education, and new and existing career exploration tools, including:

- Pennsylvania Career Coach, an online tool that provides up-to-date local employment data such as current and projected job openings, recent job growth areas, estimated earnings and occupations that match with a user's current skills and knowledge, as well as specific educational programs in a local area that will prepare an individual for a given occupation;
- Pennsylvania CareerZone, an online tool that allows students to explore career interests, perform interest inventory, learn about life skills and education requirements and find jobs in Pennsylvania; and,
- CWIA's Career Exploration tool, an online portal where individuals can assess interests, learn about apprenticeship programs and careers, view videos about occupations and review occupational wages.

L&I will encourage opportunities for career exploration and job-training by sharing promising practices; promoting use of the waiver on the prohibition of the use of Individual Training Accounts (ITAs) for out-of-school youth; encouraging industry partnerships to establish training opportunities that benefit both youth and employers; advocating the support and connection of disconnected youth via LWIAs with YouthBuild and Job Corps sites by requesting that LWIBs incorporate these activities into their new Local Plan; pursuing partnership opportunities between the workforce development system and PennSERVE; increasing internship opportunities within the public workforce system to WIA Youth; and using information from the nationally-recognized Regional Career Educational Partnerships for Youth (RCEPs). Representatives from the commonwealth's four Job Corps locations (Allegheny, Luzerne,

Philadelphia and Sullivan counties) are required members of local Youth Councils. In areas where Job Corps centers are not located, LWIBs will continue to be encouraged to invite Job Corps representatives to serve on Youth Councils. PA CareerLink® staff work with Job Corps Business & Community Liaisons to coordinate services in accordance with section 153 of WIA.

Increase Participation in STEM

In 2008, approximately one out of every five Pennsylvania workers (1.3 million individuals) was employed in an occupation with significant Science, Technology, Engineering, and Mathematics (STEM) skill requirements. STEM occupations are expected to have above-average employment growth rates through 2018 - 6.3 percent for STEM versus 4.6 percent across all industries.

Structured, short-term projects or focused competitions where students work collaboratively in a team environment are one of the most successful ways to engage in-school youth in education and careers, particularly STEM occupations. The commonwealth will place increased emphasis on STEM opportunities through efforts that include the Pennsylvania STEM Initiative and the PA STEM Girls Academies. The Pennsylvania Statewide Afterschool/Youth Development Network (PSAYDN) has received a STEM planning grant from the Noyce and Charles S. Mott Foundations to develop an implementation plan to increase integration of STEM into out-of-school time programs throughout the commonwealth. During PY '12 and PY '13, L&I staff will seek ways that LWIA youth staff around the state might most effectively partner with the efforts of PSAYDN.

Implement Targeted Industry Program (PA-TIP)

The PA-TIP, which was fully implemented by the Pennsylvania Higher Education Assistance Agency (PHEAA) in July 2012, is a program that provides grants to students enrolling in certificate programs less than two years in length for certain high-priority occupations. In the first year, the targeted industry clusters include energy, agriculture and manufacturing. This initiative will increase access to postsecondary education in targeted programs by reducing cost barriers. L&I's Center for Workforce Information and Analysis will collaborate with PHEAA to verify outcomes over the duration of this certificate program.

Dropout Prevention and Reengagement of Disconnected Youth

The First Lady's *Opening Doors* initiative, with collaboration from L&I, PDE, DPW, DCED and the DOC, focuses on increasing the high school graduation rate in the commonwealth. Initial efforts are centered on an "early warning indicator and intervention system" to identify and intercede with middle school youth at risk of dropping out of school. This system will keep more youth in school and on track to graduate, seek higher education or training and find sustainable employment.

RCEPs were developed to address dropout prevention and reengagement of disconnected youth. Reengagement strategies will continue to be the focus of integrated youth networks in each of the LWIAs.

Youth with Disabilities

OVR is engaged in statewide and local initiatives to help youth with disabilities successfully transition from school to work. OVR is meeting with stakeholder groups through the spring of 2013 to rewrite its transition policy. A revised policy is expected to be in place by the end of 2013.

At the local level, OVR District Offices have staff liaisons in every public school district as well as in many of the private, parochial, and charter schools. OVR staff accept referrals from these sources, provide information to students, parents and school personnel, and participate in local interdisciplinary teams to address issues of dropout prevention and youth reengagement.

District Offices will continue to actively work with LWIBs and Youth Councils to establish liaison points at every Youth Development Center and Youth Forestry Camp, as well as facilities and treatment centers serving "at-risk" youth with mental health and substance abuse issues.

As a partner in the Pennsylvania Community of Practice on Transition Conference, OVR participates in the development, planning and implementation of statewide training and educational initiatives. This event introduces youth and their families, as well as educators and counselors, to service providers and resources to help youth with disabilities achieve their goals of employment, post-secondary education and training, community participation and healthy lifestyles.

Project SEARCH will continue to expose youth with disabilities to potential occupations by targeting non-traditional "complex, but systematic" jobs that allow people with significant disabilities to maximize their potential in independent work settings. Pennsylvania will participate in the High School Transition Program, which is targeted to students whose main goal is competitive employment and for whom traditional educational placement will not lead to positive post-school outcomes. This program includes a one-year educational/vocational program for students with disabilities in their last year of high school and a total immersion in the workplace, typically within health care or finance occupations.

5.0. Agricultural Outreach Plan (AOP)

The AOP describes the proposed activities for providing services to Pennsylvania's agricultural employers and Migrant and Seasonal Farm Workers (MSFWs). The commonwealth provides MSFWs equitable services through PA CareerLink® offices including counseling, testing and job and training referral services.

Pennsylvania's State Monitor Advocate will continue to review outreach programs for MSFWs to measure the performance of each office and ensure that outreach productivity goals are reached. USDOL reports and outreach logs are reviewed on a monthly basis along with on-site field checks and visits, and annual compliance reviews of significant MSFW offices. The State Monitor Advocate enjoys a good working relationship with the National Farm Worker Job Program (NFJP) through open communication and the sharing of ideas. NFJP was asked to review and comment on the draft State Integrated Workforce Plan (see Assurance 2.0 and 4.0).

Pennsylvania's State Monitor Advocate works full-time and performs the following:

- Monthly review of each office to ensure that outreach productivity goals are reached;
- Review of agricultural activities lists for MSFW's activities and job openings;
- Review of all interstate and intrastate clearance orders;
- Review of all MSFW-related forms prepared at PA CareerLink® offices;
- Interviewing individual(s) responsible for outreach in all local offices;
- Accompanying PA CareerLink® staff on random field visits;
- Monitoring and reviewing state and local agencies' Affirmative Action Plans;
- Establishing ongoing liaison partner organizations and other organizations serving farm workers throughout the state;
- Serving as Chairperson for the Pennsylvania Department of Labor and Industry's MSFW Coordinating Committee; and,
- Providing technical assistance in using the automated ETA 5148 quarterly report and the outreach log.

PY 2011 Agricultural Activity

Agriculture is one of Pennsylvania's leading industries, with a diversity of crop activity throughout the commonwealth. There has been a recent shift towards mechanized crops such as corn, soybeans and wheat, and several specialty crops such as sweet corn, squash, pumpkins and ornamentals.

In Pennsylvania's southeastern region a majority of smaller mushroom growers produce crops for the larger growers whose operations have become more modernized and efficient. The commonwealth is the largest producer of mushrooms in the nation, producing 62 percent of our nation's supply. Additionally, in the eastern region there is considerable blueberry and cherry production. In Bucks and Montgomery counties there are also wholesale nursery productions and several apple orchards.

Adams and Franklin Counties, located in South Central Pennsylvania, are considered the state's fruit-belt. The largest crop is apples, followed by peaches, cherries and pears. Although not nearly as large as Adams and Franklin Counties' apple production, Bedford and Blair Counties

have numerous apple growers. A burgeoning local wine industry has resulted in the expansion of acreage dedicated to grapes.

The agricultural activity in the western region of the state tends to be more in wholesale evergreen nurseries, vegetables and grapes. In the northwestern portion of the state there is more emphasis on grapes, followed by cherries, assorted vegetables and nursery production.

PY 2011 MSFW Activity

During PY 2011, there were an estimated 45,500 migrant workers in the commonwealth, with 320 MSFWs registered for services with PA CareerLink®. Since only a small percentage of MSFWs use the PA CareerLink® computerized system, the 320 registered farm workers represent less than one percent of all MSFWs. These numbers are not unique to Pennsylvania or to Federal Region II. One of Pennsylvania's neighboring states listed in their AOP zero (0) as the total number of registered farm workers on their system. While MSFW usage of state one-stop services are constantly low through the entire East coast migrant stream, Pennsylvania welcomes and encourages MSFWs to take full advantage of the wide range of services.

MSFW activity is year-round in Pennsylvania. MSFWs represent an almost constant presence in the commonwealth. Many agricultural employers, specialty growers and others cultivate an on-going relationship with farm workers and keep in touch with these workers even when they are out of state. The same holds true for FLCs. There is a "big picture" with regard to the two significant agricultural offices. Activities wax and wane by season. Apples are by far the largest crop in those areas. There is a pruning season, which runs from winter to spring. A handful of farm workers can prune large orchards over that period of time. Later on in spring the same workers may thin apples. Thinning typically ends at about the same time that the blueberry harvest begins in New Jersey, and migrants leave the area and return later on around the time that the earliest of tree fruits are harvested. That continues until late fall, and after that the great majority of farm workers migrate to Florida for the winter vegetable, fruit, and citrus season.

Outreach is performed at the height of the harvest season. One aspect of outreach is to determine the number of MSFWs in an area. To perform outreach in the off (or slow) season could result in counting many of the same workers more than once. The few workers who had stayed behind for the pruning and thinning season are the same workers who had received contact and service information during the harvest season.

The following table shows estimated numbers of MSFWs involved in the harvest of labor intensive agricultural communities for some of the highest volume crops during PY 2011. Estimates have changed only slightly over the last several years.

Table 5.1. Estimates of Migrant and Seasonal Farm Workers

Crops	MSFW Estimates	Geographic Area
Apple/Peach	4,000 Workers	South Central PA
Green Wrap Tomatoes	150 Workers	North Central PA
Mushroom Harvest	5,000 Workers	Southeast PA
Vegetable Harvest	4,000 Workers	South Central & Western PA
Nursery/Landscape/Trees	150 Workers	Western & Central PA
Cut-Christmas Trees	250 Workers	Central & Eastern PA

The difference in numbers between the estimated 45,500 MSFWs in Pennsylvania and the numbers of estimated workers provided in Table 5.1 (13,550) can be attributed to all other crop activities, many of which are too small to have their own category and breakdown. Cherries, strawberries, grapes, raspberries, blueberries, nuts, pears, Asian pears, apricots, pumpkins, sweet corn, potatoes, beets, asparagus, carrots, garlic, and a full range of other crops comprise a large agricultural industry spread out across the state. The 45,500 number of farm workers on the AOP was provided to the commonwealth by the 167 Grant recipient, PathStone, which collects data and comes up with the total number of MSFWs on an annual basis.

Pennsylvania has received a waiver from the USDOL to pilot the Common Measures Management System. Some of the MSFW data elements are no longer captured. Therefore, to account for those missing elements, data from prior years has been used, factoring in current agricultural trends in the state. Data that continues to be captured reflect the stability and accuracy of the report.

Between July 1, 2011, and June 30, 2012, CWDS listed 55 temporary H-2A agricultural job postings. One hundred fifty U.S. workers applied for these jobs in person at PA CareerLink® offices. A considerably larger number of U.S. applicants self-referred for those same jobs, but the exact numbers are not captured. Total numbers are captured by the Chicago National Processing Center. Of the 150 known applicants to these jobs, no U.S. workers were hired. During this same period, PA CareerLink® offices received 7,356 temporary non-agricultural job openings and 47,287 permanent non-agricultural job openings. PA CareerLink® offices placed 5,906 job applicants against the temporary non-agricultural job postings and 32,849 against the permanent non-agricultural job postings.

The 5148 Labor Exchange Agricultural Reporting System (LEARS) statistical activities require little explanation. Although MSFW numbers are low due to extenuating circumstances, Pennsylvania consistently meets and exceeds USDOL-ETA goals. All five "Equity Indicators," i.e., *referrals to jobs, staff assisted services, supportive services, career guidance,* and *job development contacts* were met. That means that in each of the above categories MSFWs received equal or greater service than the general population. With regard to the seven "minimum service level indicators," which are job placement, *placed at $.50 above the*

minimum wage, placed in long term non-ag job, reviews of significant offices, field checks conducted, outreach contacts per staff day worked, and *timely process of ES complaints*, all service levels consistently met or surpassed DOLETA goals for the year.

Unlike areas of growth industries, agriculture in Pennsylvania remains robust yet static. Therefore, our goals are set accordingly. From year to year there is practically no change in the numbers of growers, labor camps, and ultimately MSFWs. The same holds true for the H-2A guest worker program. The different numbers of H-2A orders from year to year generally vary by single digits. Thus field checks, field visits, outreach, monitoring, and equity ratio indicators remain constant.

During the 2011 growing/harvest season, L&I received a total of 143 agricultural interstate clearance orders from Massachusetts. These clearance orders were for a total of 1,500 farm workers.

Projected Level of Agricultural Activity

PY 2012 activities are anticipated to be similar to the activities in PY 2011. Projections of agricultural activities remain static from year to year in Pennsylvania. While vegetable growers may rotate their crops within their own farms, the harvest remains the same. Only weather conditions and unpredictable climate variations can change agricultural activities for the coming year, and those changes cannot be predicted this far in advance. During the years of the housing boom there had been a progressive reduction in farming in the commonwealth. Those changes halted when the housing market became stagnant.

Projected Number of MSFWs for the Coming Year

The commonwealth projects 45,500 MSFWs for the coming year as estimated by WIA 167 National Farmworker Jobs Program (NFJP) grantees. This number remains static because similar crop activities are anticipated.

In PY 2012, PA CareerLink® offices estimate they will receive approximately 700 agricultural job openings and will refer applicants to approximately 85 percent of them. The offices estimate they will continue to receive approximately 140 clearance orders for the PY 2012 harvest season from other states and anticipate these to be primarily requests for H-2A workers.

Outreach Activities

Wagner-Peyser staff and WIA 167 NFJP grantees (participating partner agencies) have set a goal of contacting five percent of the total estimated number of MSFWs in the state during PY 2012. Five percent has been a consistent number from year to year. While the commonwealth understands the higher percentage the better, limited resources and a diminished economy make it a challenge to maintain the current numbers. The goal for the immediate future is

sustainability. The level of Wagner-Peyser funding to be used on outreach is equivalent to an average minimum of five outreach contacts per Wagner-Peyser staff workday. The amount of funding decreases proportionately as the average number of MSFWs contacted per staff workday increases.

Open communication is on-going with the liaison, partner agencies, i.e., Migrant Health, Migrant Education, PathStone, and legal services. PathStone shares statistical information with the commonwealth and is also a partner in several Pennsylvania CareerLinks®. Frequently informational exchanges occur with regards to services to MSFWs. Cooperation amongst partner agencies is common. Referrals to PA Dept. of Labor & Industry with regards to wage complaints, job referrals, working conditions, housing conditions, unsafe working conditions, etc. are frequent. MSFWs seeking OJTs, in need of emergency lodging or food, ESL classes, emergency transportation, health issues, etc. are immediately referred to the appropriate partner agency. These open lines of communication and referrals serve almost synergistically to assist MSFWs.

Outreach is defined as going to farm labor camps and providing information about PA CareerLink® services and services available through other agencies; visual re-inspection of labor camps; informing MSFWs of their rights; and taking complaints, if necessary. Outreach is also used to obtain a headcount of farm workers. A contact is an in-person, one-on-one or group encounter with farm workers. Contact numbers are increased by going directly to the place of work or to the labor camp. Field checks occur in H-2A orders where there have been U.S. workers hired. Field visits are random, and employers are contacted for permission to visit their workers. Field checks generally take place if there are U.S. workers. Rarely, if ever, are U.S. workers hired for H-2A orders in Pennsylvania. If third-party complaints come in or workers directly complain about conditions, or if the employer has had problems in the past, those workers will be visited. Tools used to conduct outreach contacts include printed material, flyers, cellular phone, business cards and posters. Printed materials range from business cards, listings of services, provider agencies, worker rights, and topical information on everything from pesticides to heat stress. Outreach focuses on farm worker services, health and safety, abuse, apparent violations, farm worker rights, and all topics are weighted equally as any particular topic covered may ultimately be the most important to a farm worker.

Services Provided to MSFWs through the PA CareerLink® Delivery System

Each PA CareerLink® has a designated agricultural specialist. Though some one-stops in metropolitan areas have no or minimal agriculture, the offices will provide any visiting MSFWs with full and equal services. In other, non-significant MSFW PA CareerLinks®, outreach is performed when necessary. In significant agriculture offices, Adams and Franklin Counties, 100 percent of farm labor camps receive outreach.

Agricultural employers are treated equally and with the same high standards as all other employers throughout the commonwealth. Contacts are tracked on the PA CareerLink®

computer system as are those of all other employers.

PA CareerLink® offices with considerable numbers of MSFWs are deemed "Significant Offices" by 20 CFR 651.10. Designated staff in these offices provide MSFWs with in-depth services including: referrals to agricultural and non-agricultural jobs; information on training and supportive services; testing, counseling and job development services; and an explanation of basic farm worker rights and the complaint system. These services are provided regardless of a MSFW's ability to communicate in English. See available LEP services in other areas of this plan.

The system provides MSFWs the opportunity to file complaints when violations are committed. Services provided at PA CareerLink® offices are measured using the indicators of compliance reports as mandated by federal regulation at 20 CFR 653.112.

Only significant agricultural offices (two, in Adams and Franklin Counties) are required to have bilingual MSFW specialists. Other offices covered by LEP requirements may have bilingual staff, but they are not necessarily designated as MSFW specialists. One of Pennsylvania's two significant offices, Franklin County, is currently without an MSFW specialist, but assurances have been formally made and the next open position at that PA CareerLink® has been designated as a bilingual MSFW Specialist position. That individual will also be trained to perform MSFW outreach in that county. Currently Pennsylvania's State Monitor Advocate performs outreach in both significant agricultural counties. In the Adams County office, the greater of the two significant agricultural offices, the PA CareerLink's® bilingual MSFW Specialist covers the office regarding MSFWs. Peak season in the two significant agricultural offices is September through November.

Services Provided to Agricultural Employers through the PA CareerLink® System

Pennsylvania growers are offered the full range of PA CareerLink® services. Growers receive additional services from the Pennsylvania Farm Bureau, numerous growers' associations and the Pennsylvania Department of Agriculture.

Through the Agricultural Recruitment System (ARS), the PA CareerLink® offices are able to help employers meet their needs for permanent, temporary and/or seasonal labor by placing job postings in CWDS and by using a vigorous agricultural employer marketing and outreach program.

All Pennsylvania CareerLinks® provide exceptional employer services. Most outreach occurs at the height of harvest season when farm worker populations are greatest. While some outreach occurs in the off season, it is usually random, spot check as follow-up to previous problems, or as the result of the request from a farm worker who has raised doubts as to the current conditions.

In addition to PA's high standard of business services, as outlined in the body of BWDP's State Plan, agricultural employers are also offered our services when met in person on MSFW outreach, at agricultural meetings, and other business-related events. Due to the nature of these encounters they are not coordinated with Business Services; however, they do serve to reinforce our overall goal of providing the best services possible.

Job posting requirements, as specified under federal regulations at 20 CFR 653, and housing standards, as specified at 20 CFR 654 and 29 CFR 1910.142, are complied with in the PA CareerLink® offices. Additional requirements, as outlined in ETA Manual No. 3398, which pertain to requests from employers for employing temporary alien agriculture workers under the H-2A Program, are also followed. Along with these requirements, PA CareerLink® staff conduct Prevailing Wage and Prevailing Practice surveys where there is significant MSFW activity and where there are requests for seasonal or temporary farm workers under the H-2A Program.

6.0. Senior Community Service Employment Program (SCSEP) Plan

The purpose of the SCSEP plan is to foster both short- and long-term coordination among the various national and state SCSEP grantees and sub-grantees operating within the commonwealth. The intent is also to facilitate the efforts of key stakeholders to work collaboratively to accomplish SCSEP goals to develop individual economic self-sufficiency and promote useful opportunities in community service activities to increase the number of persons who may enjoy the benefits of unsubsidized employment. SCSEP promotes part-time employment opportunities in community service activities for unemployed low-income persons who are age 55 or older and who have poor employment prospects.

USDOL currently provides SCSEP funds to the Pennsylvania Department of Aging (PDA) and nine national organizations that provide SCSEP services in the commonwealth: American Association of Retired Persons (AARP); Associacion Nacional Pro Personas Mayores (ANPPM); Experience Works, Inc. (EW); Goodwill Industries, Inc. (GI); National Asian Pacific Center on Aging (NAPCA); National Caucus/Center on Black Aged, Inc. (NCBA); National Council on the Aging (NCOA); Senior Service America, Inc. (SSA); and the National Urban League (NUL). In Fiscal Year (FY) 2012-13, PDA will contract directly with Experience Works, Inc. to provide SCSEP services in 39 of the 52 Area Agencies on Aging (AAAs) Planning and Service Areas (PSAs). PDA will continue to directly provide the remaining 13 AAAs with SCSEP funds in FY 2012-13.

Plan for Training SCSEP Participants

As of June 30, 2011, 84 percent of the SCSEP individuals served by the PDA and the nine national SCSEP sponsors had an education attainment level of high school diploma or less. As a result, the occupations that these individuals have the skills to obtain will require either short-term OJT or moderate-term OJT. Examples of a few statewide High Priority Occupations (HPOs)

that require short-term OJT and in which SCSEP participants have found unsubsidized employment are child care workers, drivers and office clerks. Examples of a few statewide HPOs that require moderate-term OJT and in which SCSEP participants have found unsubsidized employment are secretaries, maintenance and repair workers, and general and customer service representatives. HPOs in each local Workforce Investment Area requiring short-term OJT or moderate-term OJT have been provided to the SCSEP providers.

Table 6.1 identifies occupations with the highest percentage of workers aged 55 plus with the highest employment growth projections. Table 6.2, on the next page, shows the occupations requiring short- or moderate-term on the job training with the most annual openings.

Table 6.1. Statewide Industry Employment Growth Projections for Occupations with the Highest Percentage of Workers Aged 55-plus.

NAICS Code	Industry Title	Empl. (2008)	Proj. Empl. (2018)	Volume Empl Change (2008-18)	Percent Empl Change (2008-18)
7121	Museums, Parks & Historical Sites	6,490	7,220	730	11.3
4852	Interurban & Rural Bus Transportation	730	800	70	9.6
4851	Urban Transit Systems	530	570	40	7.6
8122	Death Care Services	7,080	7,550	470	6.6
5191	Other Information Services	8,600	9,110	510	5.9
4854	School & Employee Bus Transportation	21,810	23,000	1,190	5.5
4889	Other Support Activities For Transportation	1,440	1,510	70	4.9
2372	Land Subdivision	1,440	1,500	60	4.2
4855	Charter Bus Ind.	2,690	2,800	110	4.1
	TOTAL JOBS	**6,234,130**	**6,382,170**	**148,040**	**2.4**

Table 6.2. Statewide Occupational Employment Projections for Short- or Moderate-Term OJT Occupations with the Most Annual Openings

SOC Code	SOC Title	Educ. Level	Empl. (2008)	Proj. Empl. (2018)	Empl. Change (2008-18)
29-2052	Pharmacy Technicians	MT OJT	15,010	19,500	29.91
31-9092	Medical Assistants	MT OJT	23,390	28,770	23
31-1011	Home Health Aides	ST OJT	54,110	66,380	22.68
39-9021	Personal & Home Care Aides	ST OJT	37,190	45,570	22.53
21-1093	Social & Human Service Assistants	ST OJT	20,610	24,330	18.05
33-3012	Correctional Officers & Jailers	MT OJT	17,710	20,320	14.74
45-2092	Farmworkers & Laborers - Crop, Nursery, & Greenhouse	ST OJT	34,910	39,630	13.52
39-9011	Child Care Workers	ST OJT	44,140	49,710	12.62
43-3011	Bill & Account Collectors	MT OJT	17,520	19,660	12.21
39-3091	Amusement & Recreation Attendants	ST OJT	10,290	11,510	11.86
41-2021	Counter & Rental Clerks	ST OJT	17,240	19,230	11.54
43-4051	Customer Service Representatives	ST OJT	100,840	112,250	11.31
35-9011	Dining Room & Cafeteria Attendants & Bartender Helpers	ST OJT	15,980	17,700	10.76
35-3011	Bartenders	ST OJT	30,220	33,470	10.75
35-3021	Combined Food Preparation & Serving Workers	ST OJT	126,380	139,390	10.29
35-2021	Food Preparation Workers	ST OJT	35,480	38,940	9.75
35-2014	Cooks, Restaurant	MT OJT	34,440	37,690	9.44
33-9092	Lifeguards, Ski Patrol, & Other Protective Service Workers	ST OJT	5,560	6,070	9.17
39-3031	Ushers, Lobby Attendants, & Ticket Takers	ST OJT	5,690	6,190	8.79
37-3011	Landscaping & Groundskeeping Workers	ST OJT	46,520	50,590	8.75
35-3031	Waiters & Waitresses	ST OJT	97,160	104,460	7.51
35-9031	Hosts & Hostesses - Restaurant, Lounge & Coffee Shop	ST OJT	14,820	15,910	7.35
33-9032	Security Guards	ST OJT	38,990	41,640	6.8
43-6013	Medical Secretaries	MT OJT	20,370	21,750	6.77
35-3022	Counter Attendants - Cafeteria, Food Concession, & Coffee Shop	ST OJT	15,230	16,230	6.57
35-9021	Dishwashers	ST OJT	22,230	23,600	6.16
37-2012	Maids & Housekeeping Cleaners	ST OJT	37,500	39,740	5.97
43-4171	Receptionists & Information Clerks	ST OJT	52,830	55,980	5.96
41-2031	Retail Salespersons	ST OJT	206,300	214,410	3.93
37-2011	Janitors & Cleaners	ST OJT	109,170	113,200	3.69
33-3051	Police & Sheriff's Patrol Officers	MT OJT	28,060	28,950	3.17
43-3071	Tellers	ST OJT	30,870	31,600	2.36
43-3031	Bookkeeping, Accounting, & Auditing Clerks	MT OJT	82,980	84,900	2.31
43-9061	Office Clerks, General	ST OJT	163,680	166,250	1.57
41-4012	Sales Representatives	MT OJT	85,300	86,550	1.47
35-2012	Cooks, Institution & Cafeteria	ST OJT	19,320	19,590	1.4

Appendix H identifies statewide employment projections with the most annual job openings that are appropriate for the majority of SCSEP participants because they require short- to moderate-term OJT. Training for these jobs could result in a better outcome for the participant. Another tool that may be utilized to find jobs for participants is the statewide list of HPOs that require short- or moderate-term OJT. The definitions of short- or moderate-term OJT, as well as other education and training codes, can be found in *Appendix I*. Long-term projections shown in *Appendix H* and *Appendix I* apply to all older workers and not just SCSEP eligible population.

Targeting and Priority of Services

SCSEP providers use a variety of recruitment methods to reach out to individuals who must be afforded priority of service. Some of these methods are as follows: mailing postcards to zip codes that have a significant number of most in need individuals as defined by the SCSEP; networking with the Office of Vocational Rehabilitation, Veterans Administration, Adult Education Programs, and PA CareerLinks®; working with agencies that specialize in immigrant and minority services; and hiring SCSEP staff who are bilingual.

The number of SCSEP slots in each county is based on a formula that takes into account the number of individuals ages 55 and older who are at or below 125 percent of the poverty level. Federal regulatory priorities of service govern what populations are served. Priority of service is provided to:

- Veterans and qualified spouses combined with each of the below most-in-need characteristics
- Persons 65 and older OR individuals:
    - with a disability;
    - with limited English proficiency;
    - with low literacy skills;
    - who reside in a rural area;
    - with low employment prospects;
    - who failed to find employment through WIA Title I services; and
    - who are homeless or at risk of homelessness.

SCSEP Activities - Program Coordination

The SCSEP partners refer all individuals ages 55 and older to the PA CareerLink® offices to enroll in CWDS, obtain SCSEP partner services and co-enroll in WIA, OVR, and veterans programs. In addition, SCSEP staff may serve in a full -or part-time basis at PA CareerLink® offices as greeters, resource room aides, job developers, custodians, clerical aides and customer service representatives. SCSEP is represented on all 22 LWIBs in the commonwealth.

Because PDA also administers the other titles of the Older Americans Act (OAA), it is in a position to coordinate the activities of the OAA with SCSEP. PDA makes the national SCSEP

sponsors aware of these activities through email announcements.

The PA Link to Aging and Disability Resources provides access to information about long- term living supports and services through its collaborative network of partners, including assisted living nursing homes; vocational rehabilitation providers; transportation providers; and other state and local public and private agencies. SCSEP providers are joining PA Link, which will increase their knowledge about the numerous local services available to SCSEP participants.

Coordination of SCSEP Labor Market and Job Training Initiatives

On May 10, 2012, a senior staff member from CWIA provided training titled "Using Labor Market Information to Assist Older Workers" to 40 SCSEP coordinators in the commonwealth during the annual SCSEP conference. This training consisted of an explanation of the Help Wanted Online (HWOL), Job Spidering and the many other CWIA's PA WorkStats products and how SCSEP coordinators can use these tools to find SCSEP participants' jobs. The PA Department of Aging will continue to request staff from the CWIA to provide training to the local SCSEP coordinators at either the annual SCSEP training or via webinars or quarterly conference calls.

CWIA provides PDA with the monthly *Fast Facts* publication and the job-posting files sorted by LWIA. PDA will send this information to its SCSEP sub-grantees and partners. This publication will provide SCSEP organizations with the most current data for labor market and economic datasets for Pennsylvania, including unemployment rates, jobs and new hires.

SCSEP Partnership in the PA CareerLink® System

Due to a strong working relationship, PDA and L&I are working to advance a Memorandum of Understanding (MOU) between the PA WIB and all SCSEP sponsors in the commonwealth. PDA will continue to hold quarterly conference calls with the national SCSEP sponsors, the PA WIB, and other applicable agencies and organizations to discuss common issues affecting SCSEP participants. One long-term strategy for engaging employers is to develop and promote opportunities for the placement of SCSEP participants into unsubsidized employment.

Ratio of Eligible Individuals in Each Service Area to the Total Eligible Population

The statewide distribution of eligible individuals who reside in rural and urban areas is 21 and 79 percent respectively. (U.S. Census Bureau, 2006-2010 American Community Survey, *Appendix J)*. Based on the final FY 10-11 quarterly progress reports for PDA and SCSEP partners, 19 percent of the participants served resided in rural areas and 81 percent resided in urban areas. PDA and applicable SCSEP sponsors will serve more participants in rural areas in order to meet the 21 percent benchmark.

The U.S. Census Bureau 2006-2010 American Community Survey identifies 423,333 individuals in the commonwealth who were age 55 and older and whose incomes were below 125 percent of the poverty level *(Appendix K)*. Of this total, 277,921 individuals had incomes below the poverty level; therefore, 66 percent of the SCSEP-eligible population in the commonwealth was determined to have the greatest economic need (below poverty). Based on the final FY 10-11 quarterly progress reports for PDA and the SCSEP partners, 85 percent of the participants served were below the poverty level, thus exceeding the statewide percentage of eligible individuals below the poverty level.

According to the 2000 Census, 18.5 percent of those individuals eligible for the SCSEP in the commonwealth were minorities. Based on the final FY 10-11 quarterly progress reports for PDA and SCSEP partners, 47 percent of the individuals served were minorities - more than double the statewide percentage *(Appendix L)*.

The same census shows that 6 percent of the SCSEP eligible population in the commonwealth did not speak English well or did not speak English at all. Based on the final FY 10-11 quarterly progress reports for PDA and SCSEP partners, 9 percent of the individuals served had limited English proficiency *(Appendix M)* exceeding the statewide percentage.

One of PDA's and SCSEP partners' six performance goals is serving those most in need. This goal measures the average number of barriers per SCSEP participant, including severe disability; frailty; age 75 or older; old enough for but not receiving Social Security Title II; severely limited employment prospects and living in an area of persistent unemployment; limited English proficiency; low literacy skills; disability; rural; veterans; low employment prospects; failed to find employment after using WIA Title I services; homeless; and at risk of homelessness. The total number of barriers divided by the number of participants served provides the average number of barriers per participant. Based on the final FY 10-11 quarterly progress reports for PDA and SCSEP partners, five of the national sponsors exceeded their most in-need goal, and PDA and the other four national sponsors met their goals. In the aggregate, the percentage of the most in-need goal achieved by PDA and SCSEP partners was 107 percent.

Disruptions

SCSEP providers will vigilantly manage the Participant Wages component of the SCSEP budget in order to avoid enrollment freezes throughout the fiscal year and especially at the end of the fiscal year due to overspending. Monitoring the budget on a regular basis will also result in not having to increase hours for participants because of under-spending, especially at the end of the year. SCSEP providers maintain waiting lists and when participants exit the program through regular attrition, there will be another participant waiting to take the previous participant's place. This process of filling slots through normal attrition is easy to manage for durational limit exits, unsubsidized employment exits or other exits that are known in advance. However, there are times when a participant exits the program suddenly for health or family care reasons and then the SCSEP providers will do their best to minimize any adjustments in

training hours for participants. Over enrolling participants, based on the SCSEP providers historical exit rate, is a management tool that SCSEP providers use to minimize adjusting training hours.

SCSEP providers in the commonwealth will ensure the least disruption possible to participants when positions are redistributed or when new Census data becomes available. Participants can never be terminated because of changes in funding, slots, providers or any other reason. If changes are needed, they will be gradual and no participant will be adversely affected. SCSEP grantees in the commonwealth are not permitted to transfer slots from one county to another county or from one county to another state unless there is prior approval from the PDA. Any proposed changes in the distribution of slots in the commonwealth must be approved by the PDA before the SCSEP grantee approaches the USDOL.

Community Services Needed; Locations Where These Services are Most Needed

The Community Services program provides over 463,263 community service hours to public and non-profit agencies, allowing them to enhance and provide needed services. Participant Services stress Individual Employment Plan (IEP) development, orientation, community service placement, training specific to community service assignment, other training as identified in the IEP, supportive services, wages, fringe benefits, annual physicals, assistance in securing unsubsidized employment, and access to local One-Stop Career Centers.

Local leaders best understand a community's unique needs; therefore, PDA and SCSEP partners will leave the task of identifying the types of community services and the places where these services are needed to the local level.

All 67 counties in the commonwealth are allocated SCSEP slots by the USDOL based on a formula that takes into account the number of individuals age 55 and older who have incomes at or below 125 percent of the federal poverty level. In PY 12, the USDOL allocated a total of 2,365 SCSEP slots to Pennsylvania. Of those, 468 slots (20 percent of the total statewide slots) are in Philadelphia and 252 slots (11 percent of the total) are in Allegheny County. Thought the preponderance of SCSEP slots in the commonwealth are in Philadelphia and Allegheny Counties (31 percent), the remaining 65 counties have been allocated their equitable share of the total SCSEP slots available.

The types of community services needed are based on input from the partnerships developed in each county between the SCSEP providers and County Human Service Agency Coalitions, the United Way and Aging Resource and Disability Links. Some of the partners that SCSEP providers coordinate with to meet the needs of SCSEP participants are community colleges and other educational providers that provide literacy classes, computer training and ESL courses; Area Agencies on Aging that provide adult day care and other aging services; the Office of Vocational Rehabilitation which provides supportive services to participants with disabilities; and PA CareerLinks® which provide job assistance, resume writing and computer training. SCSEP

providers have a presence at PA CareerLink® locations, the LINK for Aging and Disability Resources, and the local Human Service Agency Coalitions where participating agencies are informed of the services offered by each partner and these services are subsequently coordinated as determined by the participant's Individual Employment Plan.

Long-term SCSEP Plan

Achieve an Equitable Distribution of SCSEP Positions

In cooperation with L&I, PDA will ensure equitable statewide distribution of SCSEP positions by:

- *Moving positions from over-served to underserved locations within the state in compliance with 20 CFR 641.365.*
    - This will be achieved in FY 12-13 and beyond as a result of equitable allocation of USDOL county slots through the SCSEP Solicitation for Grant Applications for National Sponsors, issued in March 2012 and in the FY 12-13 allocation to the states. This plan will eliminate the movement of national slots out of a county unless there is prior approval from both PDA and USDOL.
- *Equitably serving rural and urban areas.*
    - The formula used by USDOL will allocate SCSEP slots equitably.
- *Serving individuals afforded priority for service under 20 CFR 641.520. (20 CFR 641.302(a), 641.365, 641.520)*
    - SCSEP providers use a variety of recruitment methods to reach out to individuals who must be afforded priority of service, including mailing postcards to zip codes that have a significant number of most in need individuals as defined by the SCSEP; networking with the OVR, Veterans Administration, Adult Education Programs and PA CareerLink® offices; working with agencies that specialize in immigrant and minority services; and hiring SCSEP staff who are bilingual.

Improve SCSEP Services

PDA will continue to look at regionalization of SCSEP services as well as streamlining program and financial reporting. In the future, SCSEP funding for sub-grantees will be contingent upon the sub-grantees meeting annual USDOL established performance goals. It is envisioned that this change will occur in FY 13-14 at the earliest. PDA will be issuing a Request for Grant Applications for SCSEP services in at least 39 of the 52 AAA PSAs in January 2013. Selected providers will begin to provide SCSEP services in the designated AAA PSAs on July 1, 2013.

Serve Minority Older Individuals under SCSEP

According to the 2000 Census, 18.5 percent of those individuals eligible for the SCSEP in the commonwealth were minorities. Based on the final FY 10-11 quarterly progress reports for PDA and SCSEP partners, 47 percent of the individuals served were minorities, which is more than

double the statewide percentage. The commonwealth will continue to utilize current strategies as minorities are being served at a much higher level than their proportionate share. SCSEP providers will continue to make extensive outreach efforts to potential minority SCSEP participants and communities, specifically to community groups, senior centers, cultural/social groups, fraternal organizations, chambers of commerce, libraries, community based media, community leaders and retail stores. Current partnerships with minority organizations will be renewed. Outreach to minority populations will continue to include paid advertisements and coordination with organizations that serve minority groups.

Strategy for Continuous Improvement

All SCSEP grantees in the commonwealth will be invited to attend future SCSEP trainings conducted by PDA. The PDA will conduct SCSEP training each year on topics that are requested from the local SCSEP coordinators or are deemed by the PDA to be needed based on the current SCSEP climate. For example, if SCSEP regulations are published, there will be training on the new regulations. The annual training will address best practices to assist grantees in meeting the common measure performance goals as well as the other goals of community service, most in-need and service level. In addition to the annual training, the PDA is currently conducting SCSEP monitoring of the local providers and technical assistance is provided at that time on areas that PDA deems unsatisfactory. Local SCSEP providers are also provided with the call in information to participate on any of the DOL webinars related to performance, assessments, IEPs, etc. PDA staff review applicable SPARQ Management Reports and assist SCSEP providers in achieving higher performance. For example, PDA staff review exits not due to unsubsidized employment and instruct providers to contact these individuals at the end of the quarter after exit quarter to determine if they have found employment.

Additionally, PDA has SCSEP Performance Measures and Goals for FY12-13. They are as follows:

1. "Community Service" is defined as the total number of hours of community service provided by SCSEP participants divided by the number of hours of community service funded by the grant. Paid non-community service training hours are excluded from this measure. **For Fiscal Year 12-13, the PDA goal for this measure is 86.4%.**

2. "Common Measures Entered Employment" is defined as the number of participants who are employed in the first quarter after the exit quarter divided by the number of participants who exit during the quarter. **For Fiscal Year 12-13, the PDA goal for this measure is 35.5%.**

3. "Common Measures Employment Retention" is defined as of those participants who are employed in the first quarter after the exit quarter, the number of participants who are employed in both the second and third quarters after the exit quarter divided by the number of participants who exited for employment during the exit quarter. **For Fiscal Year 12-13, the PDA goal for this measure is 58.4%.**

4. "Common Measures Average Earnings" is defined by the formula: of those participants who are employed in the first, second and third quarters after the exit quarter: total earnings in the second quarter plus total earnings in the third quarter after the exit quarter divided by the number of participants who exited for employment during the exit quarter. **For Fiscal Year 12-13, the PDA goal for this measure is $7,439.**

5. "Service level" is defined as the total number of participants served divided by a grantee's authorized number of positions. **For Fiscal Year 12-13, the PDA goal for this measure is 150%.**

6. "Service to Most-in-Need" is defined by counting the total number of the following characteristics for all participants and dividing by the number of participants served. Participants are characterized as most-in-need if they:

   a) have a severe disability
   b) are frail
   c) are age 75 or older
   d) meet the eligibility requirements related to age for, but do not receive, benefits under Title II of the Social Security Act (42 U.S.C. 401 et seq.)
   e) live in an area with persistent unemployment and are individuals with severely limited employment prospects
   f) have limited English proficiency
   g) have low literacy skills
   h) have a disability
   i) reside in a rural area
   j) are veterans who meet the criteria of the Jobs for Veterans Act (Pub. L. 107-288)
   k) have low employment prospects
   l) have failed to find employment after utilizing services provided under title I of the Workforce Investment Act of 1998 (29 U.S.C. 2801 et seq.)
   m) are homeless or at risk for homelessness

For Fiscal Year 12-13, the PDA goal for this measure is 2.41.

7.0. WIA Rapid Response Activities

Rapid Response provides information and access to a comprehensive menu of available services and resources to avert or reduce the impact of plant closings and mass layoffs to businesses, communities and individuals. L&I's Deputy Secretary for Workforce Development is responsible for executive oversight of Pennsylvania's Rapid Response program.

Rapid Response Services (RRS) is responsible for the development of policies and implementation of the rapid response program and includes staff assigned to geographic areas

comprised of one or more LWIAs. Early intervention services provided through RRS offer workers affected by downsizing the best chance to re-enter the workforce as quickly as possible. Since its inception, RRS has become nationally recognized, often cited by the USDOL as a model for service delivery. *(See Appendix N for additional information regarding RRS processes and services.)*

L&I contracted with the Steel Valley Authority to design and manage Pennsylvania's Strategic Early-Warning Network (SEWN). SEWN, in collaboration with RRS, provides layoff aversion services to help businesses remain competitive and keep workers employed. Additional information about SEWN can be found in Section II, Part 3.0.

Strategies for Program Enhancement

The current economic climate has made rapid response a national priority. To achieve the full potential of the rapid response program, RRS will take a more comprehensive approach to identifying, planning for and responding to layoffs and preventing or minimizing their effects whenever possible. USDOL has identified 4 strategies to achieve maximum effectiveness:

- Informational and direct reemployment services for workers;
- Solutions for businesses in transition (growth or decline);
- Convening, facilitating and brokering connections, networks and partners; and,
- Strategic planning, data gathering and analysis designed to anticipate, prepare and manage economic transition

Informational and Direct Reemployment Services for Workers

Rapid Response regulations allow for provision of a wide array of pre-layoff onsite services. Workers will receive the immediate services of local PA CareerLink® partners as part of an integrated Rapid Response service plan. Beginning in April 2012, each Rapid Response Coordinator was provided a comprehensive workshop, entitled "Surviving a Layoff," that can be presented at impacted worksites. The 2-hour workshop includes information regarding resumes, job search resources, budgeting and successful interviewing tips.

Solutions for Businesses in Transition (Growth or Decline)

Rapid Response realizes its full potential for employers when it is managed as a business service. The commonwealth will continue to invest rapid response dollars to fund a layoff aversion system that targets small- and medium-size manufacturing firms. Additionally, L&I plans to place RRS staff on PA CareerLink® business service teams to market dislocated workers to employers, enhancing the value of business services provided by the workforce development system.

Convening, Facilitating and Brokering Connections, Networks and Partners

RRS staff will maintain a comprehensive set of partnerships to provide customers the services, resources and benefits they are eligible for and need. To complement the current network of partnerships, RRS staff will continue outreach efforts to other entities such as the Society for Human Resource Management (SHRM), state and local economic development entities, chambers of commerce and sector-based associations and business groups, increasing education and awareness of Rapid Response services.

Strategic Planning, Data Gathering and Analysis Designed to Prepare for and Manage Economic Transition

Partnering with L&I's CWIA, RRS staff can request comprehensive reemployment assessment reports pertaining to layoffs or closures and can also provide customized LMI at all Rapid Response events. Local LMI is a valuable resource for Dislocated Worker transition team members and local PA CareerLink® partners.

Another planned initiative within RRS is the self-assessment concept identified by USDOL in Training & Employment Notice (TEN) No. 32-11 and TEN No. 31-11. Rapid Response coordinators will be expected to conduct an annual self-assessment of the activities and resources within their assigned geographic areas to maintain program consistency across the commonwealth.

Rapid Response Additional Assistance (RRAA) funding will be directed to serve LWIAs when local funding balances are insufficient to ensure a continuum of services for dislocated workers. Funds may be provided to LWIAs that experience increased numbers of unemployed individuals due to natural disasters, plant closings, mass layoffs or other events for provision of direct services to participants, such as, intensive, training and other services. WIIN No. 6-99, Change 2 *WIA Dislocated Worker Rapid Response-Additional Assistance Funds* describes the criteria, process and limitations for requesting RRAA funds. The commonwealth issues RRAA funds to LWIAs under the following five scenarios: insufficient funds, Trade/WIA co-enrollment, layoff aversion/incumbent worker strategies, incumbent worker training and statewide/regional projects.

More information about Pennsylvania's RRS procedures, policies, teams and service components can be found on the PA Workforce website under Rapid Response Policy WIINs.

8.0. Trade Adjustment Assistance (TAA)

Early Intervention to Worker Groups When a Petition has been Filed

L&I placed Trade Act Services, which administers the Trade Adjustment Assistance (TAA) program, and Rapid Response Services (RRS) within the same BWDP section to align early

intervention with TAA program administration. RRS staff market the TAA program through the Rapid Response process. They assist with filing the Trade Act petition and provide information on the TAA program. They encourage all dislocated workers to participate in the reemployment services offered through PA CareerLink® offices prior to layoff. After USDOL certifies a petition, RRCS staff coordinate and deliver group Benefits Rights Interview (BRI) sessions. The BRIs ensure that Trade-impacted workers understand their rights and responsibilities under the law. Rapid Response staff make every effort to conduct BRIs in PA CareerLink® offices to allow easy and early access to reemployment and training services. The commonwealth developed a PowerPoint presentation to ensure that all Trade-impacted workers receive the same message and to emphasize that TAA is a reemployment program.

The commonwealth implemented an online application for TAA training, job search and relocation allowances, and the Alternative Trade Adjustment Assistance (ATAA) and Reemployment Trade Adjustment Assistance (RTAA) programs. This CWDS module is accessed via the Internet, and dislocated workers, PA CareerLink® staff and training providers add information online. PA CareerLink® staff assist Trade-impacted workers with their applications, and assess the workers' skills and experiences.

Core and Intensive Services Provided to TAA Participants

The commonwealth uses Wagner-Peyser resources for core and intensive services. Pennsylvania's three-tiered strategy provides greater choice and focuses resources where dislocated workers most need them. Dislocated workers receive all WIA core services in a comprehensive PA CareerLink® office.

Pennsylvania co-enrolls all Trade-impacted workers in the WIA program to ensure that all receive the full range of assistance available to dislocated workers. Workforce Investment Information Notice (WIIN) No. 14-02 , dated June 10, 2003, *Guidance on Integrating Services Under the Trade Act Programs--the Trade Adjustment Assistance (TAA) Program, the North American Free Trade Agreement-Transitional Adjustment Assistance (NAFTA-TAA) Program, and the Trade Act of 2002 with the Workforce Investment Act* provides the commonwealth's policy on integrating services for Trade participants.

Dislocated workers who are unable to obtain employment following the delivery of core services receive intensive service referrals to appropriate partner staff.
Pursuant to federal regulations at 20 CFR§617.22(a), the commonwealth must assess participants prior to approving a training occupation. Each LWIA determines the assessment used in its PA CareerLink® office(s). The participant meets with PA CareerLink® staff after the BRI and starts the case management process. During an initial case management meeting, PA CareerLink® staff discuss career goals and schedule or conduct an appropriate assessment to see if the participant possesses the academic and employment history necessary to achieve the desired career goal. If the assessment shows a weakness, e.g., a math or reading deficiency, staff place the participant in an appropriate remediation environment.

Resources to Integrate Data Provided by Agencies Administering Different Benefits and Services

CWDS serves as the electronic case management system of record for Trade participants. Unemployment Compensation (UC) uses a separate computer system for financial determination; however, CWDS and the UC system send and receive routine data feeds to ensure validation of Trade eligibility.

9.0. WIA Waiver Requests

Pennsylvania will continue to evaluate WIA statutory and regulatory provisions to identify barriers that preclude or limit the effectiveness of the commonwealth's efforts in serving its businesses or its citizens. Where a barrier exists the commonwealth may pursue a waiver of the provision.

A newly formed workgroup of both state and local stakeholders will meet regularly to gauge if waivers are warranted. The workgroup will decide the degree to which waivers support the state's strategies and economic recovery, ensure the commonwealth has the policies in place to support each waiver's implementation and whether programmatic outcomes can be achieved as a result of the waiver.

The commonwealth carefully reviewed all current waivers to assess whether they supported the strategic goals of the integrated workforce plan. As a result, Pennsylvania has discontinued three previously-approved waivers: (1) Transfer of Funds; (2) Customized Training; and, (3) Incumbent Worker Training.

The commonwealth has considered the following waivers (approved by USDOL) and finds each supports the strategic goals outlined in this plan.

Previously Approved Waivers

Waiver to permit the commonwealth to replace the performance measures at WIA Section 136(b) with the common measures

The waiver to replace the Workforce Investment Act of 1998 (WIA) performance measures with a set of common performance measures will continue to move Pennsylvania's programs to higher accountability standards across systems, programs and agencies. The commonwealth's request for waiver of the current WIA performance measures in order to implement the Common Measures developed by OMB was approved by USDOL on January 31, 2005.

Waiver to exempt the commonwealth from the requirements to conduct evaluations and provide local workforce investment area incentive grants

The commonwealth was previously granted a waiver of the requirement to conduct evaluations of workforce investment activities for adults, dislocated workers, and youth in order to establish and promote continuous improvement of the statewide workforce investment system; and, to provide local workforce investment areas incentive grants to reward regional cooperation, local coordination of activities and exemplary performance. The commonwealth's request for waiver of these requirements was approved by USDOL on April 3, 2012.

Waiver of the prohibition on the use of Individual Training Accounts (ITAs) for older and out-of-school youth

The waiver of the prohibition on the use of ITAs for out-of-School Youth (OSY) expands consumer choice while providing relevant HPO skills training for youth in need of a pathway to career employment. OSY continue to be one of the most difficult populations to serve; this waiver provides flexibility by opening the approved training provider list to OSY. This waiver is currently approved by USDOL.

Waiver to increase the employer reimbursement for On-the-Job Training (OJT)

The OJT waiver request has been modified to include a variable rate training reimbursement based upon the skills gaps between the trainee's past training and experience and the requirements of the new job. The waiver also seeks to provide additional incentive for offering OJT opportunities to job seekers who are long-term unemployed, veterans, ex-offenders, displaced homemakers, and low-income individuals such as those receiving public assistance, migrant workers, seasonal farm workers, and/or individuals with multiple barriers to employment, including older individuals, persons with limited English proficiency, and persons with disabilities. Concurrently, employers are able to hire workers and expand their operations, which will lead to a reinvigorated local economy.

New Waivers

No new waivers will be requested as part of this plan.

Waiver Request Forms can be found in *Appendix O*.

Notice to affected local boards

The proposed waiver requests were posted on the commonwealth's official website from August 13, 2012 through August 27, 2012 as part of the State Integrated Workforce Plan (2012-2017). Stakeholders were notified via e-mail regarding the posting and the opportunity to comment.

Public Comment Period, Including Process and Dates for Comment Submission

All waiver requests are submitted to USDOL in compliance with applicable statutory and regulatory provisions/guidance.

- Waiver requests that are submitted to USDOL for approval as part of a state plan are made available for public comment as part of the state plan posting on Pennsylvania's workforce development website. Stakeholders are informed of the comment period. The email sent to USDOL as formal submission of a state plan references this process, as well as stating whether comments were received on the plan (which includes waiver requests) and, if so, how they were addressed.

- Waiver requests that are to be submitted to USDOL for approval *separately from a state plan submission* are made available for public comment on Pennsylvania's workforce development website. Stakeholders are informed of the pending waiver submission and comment period. The email transmitting the waiver request to USDOL references this process, stating whether comments were received and, if so, how they were addressed.

Section III – Assurances

Assurances and Attachments – Planning Process and Public Comment

☑	1.0	The state established processes and timelines, consistent with WIA Section 111(g) – and, where appropriate, 20 CFR 641.325 (g) – to obtain input into the development of the Integrated Workforce Plan and to give opportunity for comment by representatives of local elected officials, local workforce investment boards, businesses, labor organizations, other primary stakeholders, and the general public.	**Reference(s):** WIA Sections 112(b)(9), 111(g) 20 CFR 661.207 20 CFR 661.220(d) 20 CFR 641.325(f), (g), (h) 20 CFR 641.335
Assurance(s) or Attachment(s): • The PA Integrated Workforce Plan was provided to the PA WIB membership for review and comment on **Thursday, August 9, 2012.**			

☑	2.0	The state afforded opportunities to those responsible for planning or administering programs and activities covered in the Integrated Workforce Plan to review and comment on the draft plan.	**Reference(s):** WIA Sections 112(b)(9), 111(g) 20 CFR 661.207 20 CFR 661.220(d)
Assurance(s) or Attachment(s): • The PA Integrated Workforce Plan was provided to key workforce development planners and administrators for review and comment on **Tuesday, August 14, 2012.**			

☑	3.0	The final Integrated Workforce Plan and State Operational Plan are available and accessible to the general public.	**Reference(s):** WIA Sections 112(b)(9), 111(g) 20 CFR 661.207 20 CFR 661.220(d)
Assurance(s) or Attachment(s): • The PA Integrated Workforce Plan was posted on the L&I public website for review and comment on **Tuesday, August 14, 2012.** • **PA Integrated Workforce Plan (2012-2016)**			

☑	4.0	The state afforded the State Monitor Advocate an opportunity to approve and comment on the Agricultural Outreach Plan. The state solicited information and suggestions from WIA 167 National Farmworker Jobs Program grantees, other appropriate MSFW groups, public agencies, agricultural employer organizations, and other interested organizations. At least 45 days before submitting its final outreach, the State provided a proposed plan to the organizations listed above and allowed at least 30 days for review and comment. The State considered any comments received in formulating its final proposed plan, informed all commenting parties in writing whether their comments have been incorporated and, if	**Reference(s):** WIA Sections 112(b)(9), 111(g) 20 CFR 661.207 20 CFR 661.220(d)

		not, the reasons therefore, and included the comments and recommendations received and its responses with the submission of the plan.	

Assurance(s) or Attachment(s):

- Pennsylvania's State Monitor Advocate developed the PY 2012 Agricultural Outreach Plan (AOP) section of the Pennsylvania Integrated Workforce Plan. The AOP section of the PA Integrated Workforce Plan was provided to key stakeholder groups on Monday, July 23, 2012 to solicit comments and suggestions prior to formulating the final proposed AOP. Comments received were incorporated into the PA Integrated Workforce Plan, Section I, Plan Development. Outreach is an integral component of the MSFW service plan and a part of the overall workforce system strategic planning efforts, and ongoing open lines of communication will continue between the workforce system and the State Monitor Advocate.

☑	**5.0**	In the development of the plan, the state considered the recommendations submitted by the State Monitor Advocate in the annual summary of services to Migrant and Seasonal Farmworkers.	**Reference(s):** 20 CFR 653.108(t)

Assurance(s) or Attachment(s):

- The State Monitor Advocate developed the PY 2012 Agricultural Outreach Plan.

☑	**6.0**	The state established a written policy and procedure to ensure public access (including people with disabilities) to board meetings and information regarding board activities, such as board membership and minutes.	**Reference(s):** WIA Sections 111(g), 112(b)(9), 117(e) 20 CFR 661.207

Assurance(s) or Attachment(s):

- **Pennsylvania Sunshine Act**
- **PA Management Directive 250.1, The Sunshine Act**
- **Local Policy - WIIN 3-03, Change 2, Guidelines for Local Boards**

☑	**7.0**	Where SCSEP is included in the Integrated Workforce Plan, the state established a written policy and procedure to obtain advice and recommendations on the State Plan from representatives of the State and area agencies on aging; State and local boards under the WIA; public and private nonprofit agencies and organizations providing employment services, including each grantee operating a SCSEP project within the state, except as provided under section 506 (a)(3) of OAA and 20 CFR 641.320(b); Social service organizations providing services to older individuals; Grantees under Title III of OAA, Affected Communities, Unemployed older individuals, Community-based organizations serving older individuals; business organizations and labor organizations	**Reference(s):** 20 CFR 641.315(a)(1-10), 20 CFR 641.325 (f), (g), (h)

Assurance(s) or Attachment(s):

- The SCSEP Plan was developed by the State Department of Aging. The SCSEP Plan was submitted to the principle stakeholders commencing on Friday, June 08, 2012 until Friday, June 29, 2012. Comments received were incorporated into the PA Integrated Workforce Plan, Section I, Plan Development.

Assurances and Attachments – Required Policies and Procedures

☑	8.0	The state made available to the public state-imposed requirements, such as state-wide policies or guidance, for the statewide public workforce system, including policy for the use of WIA title I statewide funds.	**Reference(s):** WIA Sections 112(b)(2), 129, 134 20 CFR 665.100

Assurance(s) or Attachment(s):

- Workforce Investment Information Notices (WIINs), commonwealth policies and state – level guidance for LWIAs, are issued through the Bureau of Workforce Development Partnership. Stakeholders are notified of new or revised WIIN issuances. WIINs are available on Pennsylvania's workforce development website. Comments are invited through collaboration with stakeholders prior to official issuance of the WIINs. The commonwealth reviews and updates its policies regularly.
- **PA's State-Imposed Requirements for the Public Workforce System**

☑	9.0	The state established a written policy and procedure that identifies circumstances that might present a conflict of interest for any state or local workforce investment board member or the entity that s/he represents, and provides for the resolution of conflicts. The policy meets the requirements of WIA Sections 111(f) and 117(g).	**Reference(s):** WIA Sections 112(b)(13), 111(f), 117(g)

Assurance(s) or Attachment(s):

- **State Policy: PA's State and Local Board Conflict of Interest Code**
- **WIIN No. 3-03, Change 2, Guidelines for Local Boards**

☑	10.0	The state has established a written policy and procedure that describes the state's appeals process available to units of local government or grant recipients that request, but are not granted, designation of an area as a local area under WIA Section 116.	**Reference(s):** WIA Sections 112(b)(15), 116(a)(5) 20 CFR 661.280 20 CFR 667.700

Assurance(s) or Attachment(s):

- See ***Appendix P***: *"Local Workforce Investment Area Designations"*

☑	11.0	The state established written policy and procedures that describe the state's appeal process for requests not granted for automatic or temporary and subsequent designation as a local workforce investment area.	**Reference(s):** 20 CFR 667.640 20 CFR 662.280

Assurance(s) or Attachment(s):

- See ***Appendix P***: *"Local Workforce Investment Area Designations"*

☑	12.0	The state established a written policy and procedure that set forth criteria to be used by chief elected officials for the appointment of local workforce investment board members.	**Reference(s):** WIA Sections 112(b)(6), 117(b) 20 CFR 661.300(a), 20 CFR 661.325

Assurance(s) or Attachment(s):

- **WIIN No. 3-03, Change 2, Guidelines for Local Boards**

☑	13.0	The state established written policy and procedures to ensure local workforce investment boards are certified by the governor every two years.	**Reference(s):** WIA Section 117(c) 20 CFR 661.325
Assurance(s) or Attachment(s): • **WIIN No. 3-03, Change 2, Guidelines for Local Boards**			

☐	14.0	Where an alternative entity takes the place of an SWIB, the state has written policy and procedures to ensure the alternative entity meets the definition under section 111(e) and the legal requirements for membership.	**Reference(s):** WIA Section 111(e), (b) 20 CFR 661.210
Assurance(s) or Attachment(s): • This assurance is not applicable to the commonwealth.			

☐	15.0	Where the alternative entity does not provide representative membership of the categories of required SWIB membership, the state has a written policy or procedure to ensure an ongoing role for any unrepresented membership group in the workforce investment system. (Only applicable in cases where a state uses an alternative entity as its SWIB, and that entity does not provide for representative membership by individuals in the categories required by WIA sec. 111(b).)	**Reference(s):** WIA Sections 111(b), (e) 20 CFR 661.210(c)
Assurance(s) or Attachment(s): • This assurance is not applicable to the commonwealth.			

☑	16.0	When applicable, the state takes any action necessary to assist local areas in developing and implementing the PA CareerLink® system.	**Reference(s):** WIA Sections 112(b)(14), 134(c) W-P Section 8(c)
Assurance(s) or Attachment(s): • L&I has established an internal work group to review workforce policies and procedures. The Guidelines for One-Stop Chartering and PA CareerLink® Certification are undergoing review and revision. • **WIIN No. 1-11, Workforce Investment Act of 1998 (WIA) Performance Incentive Award, Technical Assistance and Sanctions Policy** • **WIIN No. 3-03, Change 2, Guidelines for Local Boards** • **WIIN No. 3-00, Change 2, Local Area Monitoring Guidelines** • **WIIN No. 2-03, Change 1, Local Workforce Investment Board Staffing Policy** • **WIIN No. 4-00, Local Workforce Investment Area Designations**			

☑	17.0	The state established procedures for determining initial and subsequent eligibility of training providers.	**Reference(s):** WIA Sections 112(b)(17)(A)(iii), 122, 134(d)(4) 20 CFR 663.515, 20 CFR 663.535

Assurance(s) or Attachment(s):
• WIIN No. 1-07, Change 1, WIA Certification Process for Eligible Training Programs/Providers

☑	18.0	All partners in the workforce and education system described in this plan will ensure the physical, programmatic, and communications accessibility of facilities, programs, services, technology, and materials for individuals with disabilities in PA CareerLink® offices	**Reference(s):** WIA Section 188 W-P Section 8(b) 29 CFR part 37 20 CFR 652.8(j)
Assurance(s) or Attachment(s): • PA's Methods of Administration for Equal Opportunity Compliance in the Workforce Investment Act Programs • CWDS Accessibility Statement			

☑	19.0	The state ensures that outreach is provided to populations and sub-populations who can benefit from PA CareerLink® offices.	**Reference(s):** WIA Section 188 29 CFR 37
Assurance(s) or Attachment(s): • PA's Methods of Administration for Equal Opportunity Compliance in the Workforce Investment Act Programs			

☑	20.0	The state implements universal access to programs and activities to all individuals through reasonable recruitment targeting, outreach efforts, assessments, services delivery, partnership development, and numeric goals.	**Reference(s):** WIA Section 188 29 CFR 37.42
Assurance(s) or Attachment(s): • PA's Methods of Administration for Equal Opportunity Compliance in the Workforce Investment Act Programs			

☑	21.0	The state complies with the nondiscrimination provisions of section 188, including that Methods of Administration were developed and implemented.	**Reference(s):** WIA Section 188 29 CFR 37.20
Assurance(s) or Attachment(s): • PA's Methods of Administration for Equal Opportunity Compliance in the Workforce Investment Act Programs			

☑	22.0	The state collects and maintains data necessary to show compliance with nondiscrimination provisions of section 188.	**Reference(s):** WIA Section 185
Assurance(s) or Attachment(s): • PA's Methods of Administration for Equal Opportunity Compliance in the Workforce Investment Act Programs			

☐	23.0	For WIA Single-Area States only, the state has memorandums of understanding between the local workforce investment board and each of the PA CareerLink® partners concerning the operation of the PA CareerLink® system in the local area.	**Reference(s):** WIA Sections 112(b)(5), 116(b), 118(b)(2)(B), 20 CFR

			661.350(a)(3)(ii)

Assurance(s) or Attachment(s):

- This assurance is not applicable to the commonwealth; reserved for WIA single-area states only.

Assurances and Attachments – Administration of Funds

☑	**24.0**	The state established written policy and procedures that outline the methods and factors used in distributing funds, including WIA Adult, Dislocated Worker, and Youth formula and rapid response funds. The policy establishes a process for funds distribution to local areas for youth activities under WIA Section 128(b)(3)(B), and for adult and training activities under WIA Section 133(b), to the level of detail required by Section 112(b)(12)(a). In addition, the policy establishes a formula, prescribed by the governor under Section 133(b)(2)(B), for the allocation of funds to local areas for dislocated worker employment and training activities.	**Reference(s):** WIA Sections 111(d)(5), 112(b)(12)(A), (C), 128 (b)(3)(B), 133(b)(2)(B), 133(b)(3)(B)

Assurance(s) or Attachment(s):

- **WIIN No. 2-00, Change 2 - Financial Management TA Guide**

☑	**24a**	For Dislocated Worker funding formulas, the state's policy and procedure includes the data used and weights assigned. If the state uses other information or chooses to omit any of the information sources set forth in WIA when determining the Dislocated Worker formula, the state assures that written rationale exists to explain the decision.	**Reference(s):** WIA Section 133(b)(2)(B) 20 CFR 667.130(e)(2)(i)-(ii)

Assurance(s) or Attachment(s):

- **WIIN No. 2-00, Change 2 - Financial Management TA Guide**

☑	**25.0**	The state established a written policy and procedure for how the individuals and entities represented on the SWIB help to determine the methods and factors of distribution, and how the state consults with chief elected officials in local workforce investment areas throughout the state in determining the distributions.	**Reference(s):** WIA Sections 111(d)(5), 112(b)(12)(A), 128(b)(3)(B), 133(b)(3)(B), 20 CFR 661.205(e)

Assurance(s) or Attachment(s):

- *See **Appendix D**: "Formula Allocation Procedures"*

☑	**26.0**	The state established written policy and procedures for any distribution of funds to local workforce investment areas reserved for rapid response activities, including the timing and process for determining whether a distribution will take place.	**Reference(s):** WIA Sections 133(a)(2), 134(a)(2)(A) 20 CFR 667.130(b)(2), (e)(4),

			20 CFR 665.340
Assurance(s) or Attachment(s): • **WIIN No. 6-99, Change 2, WIA DW RR-Additional Assistance Funds**			

☑	**27.0**	The state established written policy and procedures to competitively award grants and contracts for WIA Title I activities.	**Reference(s):** WIA Section 112(b)(16)
Assurance(s) or Attachment(s): • **WIIN No. 2-04, Grants Procedures**			

☑	**28.0**	The state established written criteria to be used by local workforce investment boards in awarding grants for youth activities, including criteria that the governor and local workforce investment boards will use to identify effective and ineffective youth activities and providers of such activities.	**Reference(s):** WIA Sections 112(b)(18)(B), 123, 129
Assurance(s) or Attachment(s): • **WIIN No. 3-05, Youth Procurement**			

☑	**29.0**	The state established written criteria for a process to award a grant or contract on a competitive basis for Summer Youth Employment Opportunities element of the local youth program, where a provider is other than the grant recipient/fiscal agent.	**Reference(s):** WIA Sections 123, 129(c)(2)(C) 20 CFR 664.610
Assurance(s) or Attachment(s): • **WIIN No. 3-05, Youth Procurement**			

☑	**30.0**	The state distributes adult and youth funds received under WIA equitably throughout the state, and no local areas suffer significant shifts in funding from year-to-year during the period covered by this plan.	**Reference(s):** WIA Section 112(b)(12)(B)
Assurance(s) or Attachment(s): • **WIIN No. 2-00, Change 2, Financial Management TA Guide**			

☑	**31.0**	The state established written fiscal-controls and fund-accounting procedures and ensures such procedures are followed to ensure the proper disbursement and accounting of funds paid to the state through funding allotments made for WIA Adult, Dislocated Worker, and Youth programs, and the Wagner-Peyser Act.	**Reference(s):** WIA Sections 112(b)(11), 127, 132, 184 W-P Sections 9(a), (c) 20 CFR 652.8(b), (c)
Assurance(s) or Attachment(s): • **WIIN No. 2-00, Change 2, Financial Management TA Guide**			

☑	**32.0**	The state ensures compliance with the uniform administrative requirements in WIA through annual, onsite monitoring of each local area.	**Reference(s):** WIA Sections 184(a)(3), (4) 20 CFR 667.200,

			20 CFR 667.400(c)(2), 20 CFR 667.410

Assurance(s) or Attachment(s):

- **WIIN No. 3-00, Change 2, Local Area Monitoring Guidelines**

☑	**33.0**	The state follows confidentiality requirements for wage and education records as required by the Family Educational Rights and Privacy Act of 1974 (FERPA), as amended, WIA, and applicable Departmental regulations.	**Reference(s):** WIA Sections 136(f)(2), (f)(3), 122, 185(a)(4)(B) 20 USC 1232g 20 CFR 666.150; 20 CFR part 603

Assurance(s) or Attachment(s):

- **The Pennsylvania Code – Chapter 61.25 Social security account numbers**
- **PA Privacy of Social Security Numbers Law-Act of June 29, 2006, P.L. 281, No. 60, Cl. 29**
- **PA's Website Privacy Policy**
- **PA Right-to-Know Law Compliance**

☑	**34.0**	The state will not use funds received under WIA to assist, promote, or deter union organizing.	**Reference(s):** WIA Sections 136(f)(2), (f)(3), 122, 185(a)(4)(B); 20 USC 1232g 20 CFR 666.150; 20 CFR part 603

Assurance(s) or Attachment(s):

- **WIIN No. 2-00, Change 2 - Financial Management TA Guide**

Assurances and Attachments – Eligibility

☑	**35.0**	Where the SWIB chooses to establish them, the state established definitions and eligibility documentation requirements regarding the "deficient in basic literacy skills" criterion.	**Reference(s):** WIA Sections 101(13)(C)(i) CFR 664.205(b)

Assurance(s) or Attachment(s):

- **WIIN 3-99, Change 2, Attachment B, WIA Eligibility Statement/Definitions**

☑	**36.0**	Where the SWIB chooses to establish them, the state established definitions and eligibility documentation requirements regarding "requires additional assistance to complete and educational program, or to secure and hold employment" criterion.	**Reference(s):** WIA Sections 101(13)(C)(iv) 20 CFR 664. 200(c)(6), 20 CFR 664.210

Assurance(s) or Attachment(s):

- **WIIN 3-99, Change 2, Attachment B, WIA Eligibility Statement/Definitions**

☑	**37.0**	The state established policies, procedures, and criteria for prioritizing adult title I employment and training funds for use by recipients of public assistance and other low-income individuals in the local area when funds are limited.	**Reference(s):** WIA Section 134(d)(4)(E) 20 CFR 663.600

Assurance(s) or Attachment(s):

- The commonwealth offers flexibility in developing a priority of service policy to the LWIBs for WIA Title I Adult intensive and training services. The LWIBs' priority of service policy must include, but is not limited to, public assistance and other low-income individuals in the LWIA. The LWIB indicates its priority of service policy in its WIA Local Plan, specifying the target groups that receive priority service.
- **WIIN 3-99, Change 2 - Title I WIA Eligibility Criteria**

☑	**38.0**	The state established policies for the delivery of priority of service for veterans and eligible spouses by the state workforce agency or agencies, local workforce investment boards, and PA CareerLink® offices for all qualified job training programs delivered through the state's workforce system. The state policies: 1. Ensure that covered persons are identified at the point of entry and given an opportunity to take full advantage of priority of service; and 2. Ensure that covered persons are aware of: a. Their entitlement to priority of service; b. The full array of employment, training, and placement services available under priority of service; and c. Any applicable eligibility requirements for those programs and/ or services. 3. Require local workforce investment boards to develop and include policies in their local plan to implement priority of service for the local PA CareerLink® offices and for service delivery by local workforce preparation and training providers.	**Reference(s):** WIA Sections 112(b)(17)(B), 322 38 USC Chapter 41 20 CFR 1001.120-.125 Jobs for Veterans Act, P.L. 107-288 38 USC 4215 20 CFR 1010.230, 20 CFR 1010.300-.310

Assurance(s) or Attachments:

- The state assures that veterans will be afforded employment and training activities authorized in section 134 of the WIA, and the activities authorized in chapters 41 and 42 of Title 38 US code. The state assures that it will comply with the veterans' priority established in the Jobs for Veterans Act. (38 U.S.C. 4215). *See Section II Operational Plan, Part 4.0, Services to Targeted Populations.*
- *See **Appendix G**: "Priority of Service Policies".*

Assurances and Attachments – Personnel and Representation

☑	**39.0**	The state assures that Migrant and Seasonal Farmworker (MSFW) significant office requirements are met. Note: The five states with the highest estimated year-round MSFW activities must assign full-time, year-round staff to outreach	**Reference(s):** WIA Section 112(b)(8)(A)(iii), 112(b)(17)(A)(iv) W-P Sections 3(a),

		activities. The Employment and Training Administration designates these states each year. The remainder of the top 20 significant MSFW states must make maximum efforts to hire outreach staff with MSFW experience for year-round positions and shall assign outreach staff to work full-time during the period of highest activity.	(c)(1)-(2) 20 CFR 653.107(a), 107(i), 20 CFR 653.112(a), 20 CFR 653.108(d)(1)

Assurance(s) or Attachment(s):

- The state assures that it will comply with the MSFW significant office requirements in accordance with 20 CFR Part 653.
- *See Section II Operational Plan, Part 5.0, Agricultural Outreach Plan.*

☑	**40.0**	Merit-based public employees provide Wagner-Peyser Act-funded labor exchange activities in accordance with Departmental regulations.	**Reference(s):** W-P Sects 3(a), 5(b) 20 CFR 652.215 Intergovernmental Personnel Act, 42 USC 4728(b)

Assurance(s) or Attachment(s):

- The state certifies that Wagner-Peyser Act-funded labor exchange activities will be provided by merit-based public employees in accordance with USDOL regulations

☑	**41.0**	The state has designated at least one person in each state or Federal employment office to promote and develop employment opportunities, job counseling, and placement for individuals with disabilities.	**Reference(s):** W-P Section 8(b) 20 CFR 652.211

Assurance(s) or Attachment(s):

- **OVR's Role in the PA CareerLinks®**

☑	**42.0**	If a SWIB, department, or agency administers state laws for vocational rehabilitation of persons with disabilities, that board, department, or agency cooperates with the agency that administers Wagner-Peyser services.	**Reference(s):** W-P Section 8(b) 20 CFR 652.211

Assurance(s) or Attachment(s):

- **OVR's Role in the PA CareerLinks®**

☑	**Subpart A**	STATEMENT OF ASSURANCES CERTIFICATION – *Governor's Signature Required*	**Reference(s):** Not Applicable

Assurance(s) or Attachment(s):

- **See Attachment 1: "Statement of Assurances Certification"**

☑	**Subpart B**	Plan Designee & Signatory Form	**Reference(s):** Not Applicable

Assurance(s) or Attachment(s):

- **See Attachment 2: "Plan Designee & Signatory Form"** (original provided to USDOL)

ASSURANCE ATTACHMENT 1

COMMONWEALTH OF PENNSYLVANIA
OFFICE OF THE GOVERNOR

Statement of Assurances Certification

The Commonwealth of Pennsylvania certifies on the tenth day of September in 2012 that it complied with all of required components of the Workforce Investment Act of 1998; the Wagner-Peyser Act of 1933, as amended in 1998; Trade Act of 1974, as amended in 2002, 2009, and the Trade Adjustment Assistance Extension Act of 2011; the Veterans Opportunity to Work (VOW) to Hire Heroes Act of 2011; the Jobs For Veterans Act, USC Title 38, Chapter 41; and the Older Americans Act of 1965, as amended in 2006. The commonwealth also assures that funds will be spent in accordance with the Workforce Investment Act and the Wagner-Peyser Act and their regulations, written Department of Labor guidance implementing these laws, and all other applicable Federal and state laws and regulations.

Governor
September 10, 2012

225 Main Capitol Building | Harrisburg, PA 17120 | 717.787.2500 | Fax 717.772.8284 | www.pa.gov

ASSURANCE ATTACHMENT 2

PROGRAM ADMINISTRATION DESIGNEES AND PLAN SIGNATURES

Name of WIA Title I Grant Recipient Agency
Pennsylvania Department of Labor & Industry
Address: 1700 Labor & Industry Building, 651 Boas Street, Harrisburg, PA 17121
Telephone Number: (717) 705-2630
Facsimile Number: (717) 787-8826
E-mail Address: jhearthway@pa.gov (Julia K. Hearthway, Secretary of Labor & Industry)

Name of State WIA Title I Administrative Agency (if different from the Grant Recipient):
Address:
Telephone Number:
Facsimile Number:
E-mail Address:

Name of WIA Title I Signatory Official
Michelle L. Staton, Deputy Secretary for Workforce Development
Address: 1700 Labor & Industry Building, 651 Boas Street, Harrisburg, PA 17121
Telephone Number: (717) 787-0805
Facsimile Number: (717) 787-8826
E-mail Address: mstaton@pa.gov

Name of WIA Title I Liaison:
Michelle L. Staton, Deputy Secretary for Workforce Development
Address: 1700 Labor & Industry Building, 651 Boas Street, Harrisburg, PA 17121
Telephone Number: (717) 787-0805
Facsimile Number: (717) 787-8826
E-mail Address: mstaton@pa.gov

Name of Wagner-Peyser Act Grant Recipient/State Employment Security Agency:
Pennsylvania Department of Labor & Industry
Address: 1700 Labor & Industry Building, 651 Boas Street, Harrisburg, PA 17121
Telephone Number: (717) 717-705-2630
Facsimile Number: (717) 787-8826
E-mail Address: jhearthway@pa.gov (Julia K. Hearthway, Secretary of Labor & Industry)

Name and Title of State Employment Security Administrator (Signatory Official)
Julia K. Hearthway, Secretary of Labor & Industry
Address: 1700 Labor & Industry Building, 651 Boas Street, Harrisburg, PA 17121
Telephone Number: (717) 705-2630
Facsimile Number: (717) 787-8826
E-mail Address: jhearthway@pa.gov

Name and Title of the State Labor Market, Workforce Information, or Research Director:
Sue Mukherjee, Director, Center for Workforce Information & Analysis
Address: 220 Labor & Industry Building, 651 Boas Street, Harrisburg, PA 17121
Telephone Number: (717) 787-6507
Facsimile Number: (717) 772-2168
E-mail Address: smukherjee@pa.gov

As the Governor, I certify that for the state/Commonwealth of Pennsylvania, the agencies and officials designated above have been duly designated to represent the Commonwealth of Pennsylvania in the capacities indicated for the Workforce Investment Act, Title I, and Wagner-Peyser Act grant programs. Later changes in the designation of officials will be provided to the U.S. Department of Labor as such changes occur.

I further certify that we will operate our Workforce Investment Act and Wagner-Peyser Act programs in accordance with this Plan and the assurances herein.

Typed Name of Governor: Tom Corbett

Signature of Governor: Tom Corbett Date: 5/21/12

Appendices

Appendix A – Plan Comments

The draft plan was posted on Pennsylvania's workforce development website for public comment from August 14, 2012, through August 27, 2012. Stakeholders and the general public were notified regarding the posting of the draft plan and the opportunity to comment.

The Department of Labor and Industry received comments from the following sources:

- Pennsylvania Department of Public Welfare
- Pennsylvania Department of Education
- Members of the Pennsylvania Workforce Investment Board
- Hospital and Healthsystem Association of Pennsylvania

GENERAL COMMENTS

- A submission suggested the plan does not adequately address adult literacy. **Response: L&I has been in discussions with Adult Basic Literacy Education (ABLE) regarding adult literacy and the tools at ABLE's disposal that could benefit job seekers and the unemployed. Any outcomes of the discussions, as warranted, will be included in a plan modification.**

SECTION I: VISION/STRATEGY

- One submission suggested an addition to the four goals found in Section I: "the development of some performance guided investment instead of just building on existing programs." Likewise, there is a concern that there is no mention of CWIA including "some performance data on those very programs being funded as part of this targeting." (Page 2) **Response: The Administration shares the commenter's belief that performance guided investment is critical, and is even more pronounced in the current economic environment. While specific performance metrics (beyond negotiated WIA performance measures) are not outlined in the plan, as new performance-based systems are developed, they will be included in a plan modification.**

- A submission stated: "Not everyone would agree that there needs to be alignment to career pathways. Some parts of the K-12 do a very good job in this area, and it may be better to suggest a focus on those that need assistance rather than to say that the entire system is flawed. It is not every educator's responsibility to know about available jobs." (Page 6) **Response: L&I changed the plan language to incorporate these concerns.**

  Original Text: Education – The K-12 system suffers from a lack of academic alignment to career pathways, while educators and trainers are either unaware of the jobs available in

the labor market or misunderstand what skills are needed for those jobs. In 2009, 33 percent of high school graduates attending higher education institutions required some remediation at a cost of more than $26.3 million to taxpayers. In addition, many graduates lack general knowledge of what is expected in a work environment, commonly referred to as "soft skills."

Changed to: Education – There are gaps in the alignment of academic coursework to career pathways in some parts of the K-12 system. Additionally, not all school personnel who assist students in decision making related to postsecondary opportunities have access to resources that provide accurate information about jobs available in the labor market and the skills needed to obtain those jobs. Many graduates also lack general knowledge of what is expected in a work environment, commonly referred to as "soft skills."

- ***Technical change:*** The Department of Public Welfare (DPW) and L&I will ~~also~~ work collaboratively to integrate the functions of Employment, Advancement, and Retention Network (EARN) centers within ~~into~~ PA CareerLink® offices. Through this partnership, comprehensive services will be delivered to all participants. (Page 8) **Response: Technical change incorporated.**

- A submission stressed the importance of focusing on the health care sector when building a pipeline of talent. Health care is facing future demands and challenges that will affect the industry as a result of PA citizen needs and the implementation of the Affordable Care Act (ACA). "Emphasis needs to be placed on addressing ... the need for more advanced practice professionals—physicians, certified nurse practitioners, and physician assistants—to provide primary care." Additionally, the industry has demand for workers trained in health care information technology and management. "The plan and the WIB need to emphasize that education and training investments targeted to the health care high priority occupations will lead to family-supporting jobs." (Page 10) **Response: The State Plan does mention the anticipated pipeline shortage in the health care sector. L&I added "health care" to the industries listed in Goal C (11) - Increase Awareness of Career Pathways to Youth, Parents, and Schools.**

  Changed to: Manufacturing and health care will be targeted in an effort to promote the quality jobs and career pathways available in those industries.

- ***Technical Change:*** ~~In 2012, t~~The Pennsylvania State Board of Education has adopted the PA Common Core Standards in English, Language Arts, and Mathematics. The PA Common Core standards are aligned with college and career expectations and were developed in partnership with Pennsylvania educators and with respect to the organization and design of the PA Academic Standards. In conjunction with additional PDE efforts, the PA Common Core Standards not only demand quality programs and rigorous instruction, but focus on ensuring that educational programs prepare Pennsylvania students to meet the needs,

challenges, and demands of any postsecondary environment. (page 10) *Response:* **Technical change incorporated.**

- A submission requested the plan delete the phrase "school administrators" in the sentence "It is critical that students, parents, teachers, counselors, and school administrators have access to quality data regarding career options and pathways," as this knowledge is not essential for school administrators. (Page 10) **Response: L&I believes it is critical that education professionals, including school administrators, have access to quality data. We do not believe the language in the plan requires any of those professionals to know the information verbatim. Because L&I feels strongly that this information is highly valuable, it provides such data to educators and the general public through its website, www.paworkforcestats.state.pa.us.**

- One submission highlights where the plan includes the goal of "Implement the Pennsylvania Targeted Industry Program (PA-TIP)" and notes that this program is already being implemented. (Page 11) **Response: Language changed to reflect the program's current implementation.**

Appendix B – Organizational Chart

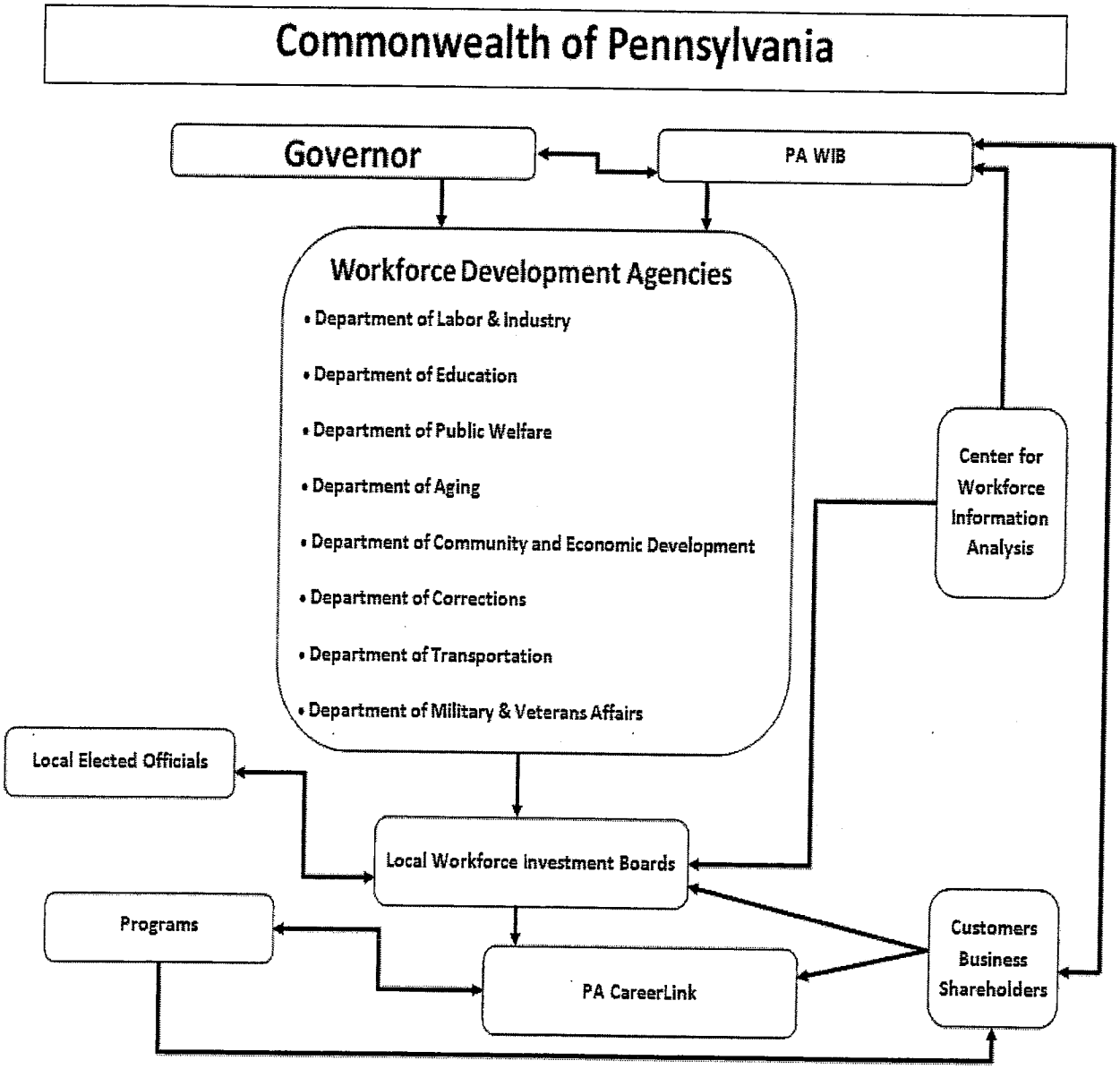

Appendix C – Organizational Chart Key

Governor

Workforce and economic development activities in Pennsylvania are directed by the governor.

Pennsylvania Workforce Investment Board (PA WIB)

As specified in both the WIA and the current Pennsylvania Workforce Development Act, the PA WIB:

- serves as a workforce development policy advisor in the implementation of programs and policies delivered under the authority of the WIA; and
- assists the governor in developing the State Workforce Investment Plan to be submitted to the US Department of Labor.

The PA WIB assigns staff as necessary to carry out the duties and functions as prescribed in both federal and state legislation.

A detailed description of the functions of the PA WIB pursuant to assisting in the development and monitoring of workforce development programs can be found in the Pennsylvania Workforce Development Act, 24 P.S. § 6250.304, which is based on § 111 of the WIA.

The PA WIB is the commonwealth's principal private sector policy advisor on building a strong workforce development system that is aligned with state education policies and economic development goals. The PA WIB advises and assists the governor and the general assembly on the implementation of a unified system to assure a well-educated, highly skilled workforce. The PA WIB is also responsible for unifying the commonwealth's existing federal and state workforce investment programs into an integrated system.

With the exception of the four legislative members (who are appointed by the general assembly), all other members are appointed by the governor. Members represent a diverse cross section of business executives, five cabinet secretaries, labor officials, education leaders, economic development practitioners and LEOs.

In accordance with sections 111(f) and 117(g) of the WIA, Pennsylvania maintains a written code of standards of conduct governing the performance of members on the state and LWIBs. The Conflict of Interest Policy is included in the attached Assurances.

The policy and program offices of L&I provide personnel, equipment and resources, as required for the functioning of the PA WIB. Other resources related to workforce development activities have been deployed by the Departments of Community & Economic Development, Public

Welfare, Education, Aging, and Corrections. Private sector and foundation support have been deployed to support regional initiatives.

The PA WIB makes information available to the public on a regular basis through open meetings in accordance with section 111(g) of the WIA. The PA WIB holds three meetings annually. Notice of each meeting is published in the Pennsylvania Bulletin, in local newspapers and on the PA WIB Web site for public access. All public PA WIB meetings comply with the Sunshine Act and Americans with Disabilities Act (ADA). Auxiliary aids and services are available upon request.

Through the communication network between the PA WIB and partners, in particular the Office of Vocational Rehabilitation, contact is made with all major stakeholder groups representing individuals with disabilities.

Fully integrating all workforce development programs to leverage resources, eliminate duplication, and increase efficiency, ensures that all Pennsylvanians will realize optimal outcomes for investments in economic and workforce development services.

Pennsylvania's Workforce Development Partners

The governor, the Secretaries of Labor & Industry (L&I), Education (PDE), Aging, Public Welfare (DPW), Community & Economic Development (DCED), Corrections (DOC), Health, Military and Veterans Affairs (DMVA), Transportation (DOT), and the Pennsylvania Workforce Investment Board (PA WIB) collaborate to develop economic and workforce development strategies and policies to move Pennsylvania toward the shared vision of a world-class workforce in the commonwealth. Each agency is responsible for the administration of one or more of the required or optional Workforce Investment Act (WIA) partner programs.

The PA WIB is the governor's principal private sector policy advisor for a workforce development system that is aligned with education policies, economic development goals, and welfare reform objectives.

A majority of workforce development programs in Pennsylvania are administered by L&I, including: WIA programs: Vocational Rehabilitation (VR), Job Corps, Rapid Response, National Emergency Grant, Adult, Dislocated Worker, and Youth programs; Wagner-Peyser Act programs, including: Labor Exchange, Unemployment Compensation (UC), Reemployment Services (RES), Reed Act, Profile Reemployment Program (PREP); Trade Act programs; Work Opportunity Tax Credit program (WOTC); programs authorized under the Jobs for Veterans Act, including Veterans Reemployment Assistance (VRAP); Labor Market Information, Foreign Labor Certification programs, Migrant and Seasonal Farmworker programs, Apprenticeship programs, Equal Opportunity, and AmeriCorps.

PDE offers four major workforce development programs: Adult Basic & Literacy Education, Apprenticeships, Career and Technical Education (CTE), and the Community College system. The focus of the ABLE program is to provide literacy skills to Pennsylvanians who need assistance to achieve success. The Apprenticeship program offers on-the-job training (OJT) and technical instruction to individuals to train them for highly skilled occupations. The CTE program offers training in the trades and industries to youth and adults in the commonwealth. The community college system provides education and training services to all populations of the commonwealth interested in furthering their educational and workforce opportunities.
DPW is another key partner in Pennsylvania's workforce development system. A major program funded through the DPW is the Road to Economic Self-Sufficiency Through Employment and Training (RESET). RESET acknowledges the critical roles of early assessment, participation in education and training and, for clients who need it, intensified remediation of barriers to employment. The programs in RESET assist welfare recipients in their efforts to gain family-sustaining wages. In addition, DPW works integrally with LWIA programs to deliver TANF services to youth.

The DOC Bureau of Correction Education focuses on the development of entry-level employment skills for inmates within three years of release. Currently inmates who meet certain requirements and who are identified during preliminary assessments are offered training in targeted occupational clusters.

DCED offers two programs as part of the workforce development system, CJT and the Workforce and Economic Development Network of Pennsylvania (WEDnetPA) Guaranteed Free Training Program. The CJT programs are designed to support the needs of employers to provide basic and advanced training to their employees, and to promote business and educational partnerships in the development and implementation of industry specific curricula. The WEDnetPA program provides qualified companies with money for training in a wide range of basic skills and advanced technologies. DCED assists in the development of small businesses with entrepreneurial training and incentive programs. Customized Job Training, Incumbent Worker Training, Research Grants, and Innovation Starter Kits are coordinated by Community & Economic Development.

Aging administers the Senior Community Service Employment Program (SCSEP). The program helps to address the workforce development needs of low-income, senior citizens. The program provides a connection to training, employment, or community service opportunities, as well as information and referral to other available services.

The United States Department of Labor Office of Apprenticeship (OA) has partnered with L&I to promote and register apprentice programs and apprentices in the commonwealth. The OA provides a field staff to visit apprentice sponsors, and to promote and write apprentice programs. The results are then presented to the Governor-appointed Pennsylvania Apprenticeship and Training Council for its review and registration. Upon registration, programs revert back to the BAT for general administration and maintenance. The BAT staff works with

Pennsylvania Department of Labor & Industry, PA CareerLinks®, state and LWIBs, and Youth Councils to encourage and spread information about the advantages of registering apprentices.

In September 2011, the Interagency Workforce Development task force was created by the governor's policy office and charged with making recommendations to the governor's office to improve workforce development programs and to better incorporate workforce development efforts into the larger economic development universe. The task force includes representatives from each of the agencies administering economic and workforce development programs. The agencies will increase interagency collaboration and communication to align and further integrate programs. A number of sub-groups were created to focus on specific workforce development issues, such as developing effective strategies to serve veterans, individuals with disabilities, the unemployed, health care workers, incumbent/underemployed workers, ex-offenders and youth. As the process moves forward, work groups will be transformed into implementation teams to carry out recommendations that are pursued. Work groups will also be instrumental in sharing information about new initiatives and grant opportunities and coordinating the resulting efforts.

Local Workforce Investment Areas

The commonwealth has designated 23 Local Workforce Investment Areas (LWIAs). Each LWIA has a designated Local Elected Official (LEO). LWIAs having more than one county elect one of the LEOs to serve as the Chief Local Elected Official.

Local Elected Official

The LEO/CEO is the local grantee responsible for program activities and funds. The LEO/CEO appoints members to serve on the Local Workforce Investment Board (LWIB).

Local Workforce Investment Boards

There are 22 Local Workforce Investment Boards (LWIBs) approved by L&I, on behalf of the governor. (The County of Allegheny and the City of Pittsburgh LWIAs share a combined workforce investment board.) LWIBs and board members will define and oversee strategies, goals, objectives and benchmarks for the use of grant funds and conduct outreach with the strategic Industry Partnerships (IP), education institutions, and the many chambers, councils, business associations and community partners in the LWIAs. The LWIB is responsible for the activities and functions described in WIA Sections 117 and 118.

LWIB staff provide local oversight and administration of grant activities, performance and funds. In most instances, staff assist in the development of contracts, identify targeted employer groups and high-priority occupations, wage expectations and reimbursement rates. Staff have developed monitoring tools for their use in maintaining quality assurance and measuring usage compliance of grant funds, activities and services. The fiscal agent issues

appropriate reimbursement to employer participants and payment for job seeker participant supports. LWIB staffs coordinate with PA CareerLink® teams to ensure successful implementation of the grant and provide performance reports and recommendations. The LWIB staff also conduct outreach with various community, economic development and education partners, as well as disseminate information through a variety of local media outlets.

LWIA Partner Organizations and Affiliations

Each LWIB engage a network of partners and affiliates to support strategies and programs that promote, advance and create opportunities for local businesses and community members. Typical partners include IPs, community and economic development organizations, councils, Societies for Human Resource Management, business associations, union organizations and media outlets that often assist with outreach and referral, and other services.

PA CareerLink® System *(Pennsylvania's One-Stop System)*

PA CareerLink® is the result of restructuring the public delivery system for workforce development services in the commonwealth. The system provides access to services and information through various means, including the Internet and a network of physical sites located across the state.

The PA CareerLink® system continues to work toward the seamless integration of systems and services. A major step towards this goal was the establishment of consolidated physical centers incorporating both mandated and community partners. One of the key responsibilities of PA CareerLink® as the One-Stop delivery system is to ensure that the WIA core services are available. Local PA CareerLink® service plans must include not only which partners are located in the site, but also how services are integrated to provide a seamless delivery system. Common services such as resource area assistance, workshops, job development, etc. of the mandated and optional partners may be provided in a team approach, thereby coordinating and integrating services to customers. The commonwealth provides overall technical assistance to help LWIBs in the development of systems reflecting these principles.

PA CareerLink® Centers

All PA CareerLink® centers appropriately represent the One-Stop service delivery system envisioned by the WIA. State agencies, county agencies, and community-based organizations staffs are co-located to provide, at a minimum, access to all partner programs mandated by WIA Section 121(b)(1). State staffs are responsible for Wagner-Peyser, Veterans' Employment and Training, Unemployment Compensation, Trade Act, Vocational Rehabilitation, Social Security Act and Food Stamp Act programs. County agencies are responsible for the WIA Title I Adult and Dislocated Worker, Older Americans and other programs determined by local need, availability, and the Operator Consortium. Community-based organization (CBO) or faith-based

organization (FBO) partners are responsible for the remaining required programs and other services that support the LWIBs' strategic visions.

Each LWIB must support at least one physical PA CareerLink® center to provide comprehensive one-stop services to businesses and people residing within the LWIA. PA CareerLink® Centers are comprehensive physical locations where at least three mandated partners are physically located, where core and intensive services are available, and where access to other mandated programs and activities carried out by the PA CareerLink® partners is provided. A minimum of one comprehensive physical center is required in each LWIA.

Comprehensive sites are expected to provide all of the core services outlined in the WIA, including:

- Outreach, intake and orientation;
- Initial assessment of skill levels, aptitudes, abilities and supportive service needs;
- Job search and placement assistance;
- Career counseling;
- Provision of labor market information;
- Provision of information about education and training providers; and
- Financial aid advising.

Partner Programs

- WIA Title I Programs
- Adults
- Dislocated Workers
- Youth
- Job Corps
- Native American programs
- Migrant and Seasonal Farm Workers Programs
- Wagner-Peyser (Employment Service)
- Unemployment Compensation
- WIA Title II--Adult Education and Literacy
- Social Security Programs (Welfare-to-Work)
- Title V Older Workers
- Carl Perkins
- Trade Adjustment Assistance Act
- Veterans Employment
- Community Service Block Grants
- Rehabilitation Act of 1973 (OVR)
- Department of Housing and Urban Development (HUD)

The commonwealth workforce development partners, whether co-located or not, have detailed the types and availability of services to be provided in the LWIB/One-Stop Partner Agreement. All of the PA CareerLink® partners maintain a "no wrong door approach", providing customers information and referral to other partner programs that may be capable of providing assistance to the customer. Services are provided in an integrated, seamless delivery method under the name of PA CareerLink®. Staff from the various funding streams are available and cross-trained to deliver services in an integrated and seamless manner.

All PA CareerLink® centers are required to be ADA Compliant as well as provide services to individuals with limited English proficiency. Further information about these activities is included elsewhere in this document.

PA CareerLink® Operator

Each LWIB provides policy, oversight and strategic direction to the PA CareerLink® operator or operator consortium for the local workforce investment area. Establishment of an operator consortium must include at least three of the mandated PA CareerLink® partners, in agreement with the LWIB and the CEO.

The PA CareerLink® operator(s) designs service delivery strategy for the PA CareerLink® center(s) in the LWIA to align with the LWIB's strategic direction and performance objectives. The PA CareerLink® operator is also responsible for operational management of the PA CareerLink® facility.

PA CareerLink® Administrator

A PA CareerLink® administrator at each PA CareerLink® center oversees operations and provides functional supervision of all staff both commonwealth and non-commonwealth staff, and of all programs, services and activities offered through the local PA CareerLink® center.

PA CareerLink® Teams

Although responsibility for the individual programs may reside with a specific agency, staffs are assigned to integrated PA CareerLink® teams by function. These integrated teams have proven to expediently and effectively administer to the workforce development needs of businesses and individuals, offering a seamless, targeted service delivery experience. There are multiple teams assigned to help jobseeker customers achieve their workforce development goals, these teams will be responsible for providing appropriate access to core, intensive, training, employment and supportive services.

Business Services Teams conduct outreach with current and potential PA CareerLink® business customers, industry partners, community and economic development organizations. Provide employer orientations, occupational analysis, develop contracts and individual training plans,

assist with the posting of job orders into CWDS, PA CareerLink's® on-line job bank; coordinate with any bargaining unit organizations, conduct worksite monitoring and maintain communication with the employer customer.

Commonwealth Workforce Development System (CWDS)

While there is staff available in the PA CareerLink® centers to provide direct assistance to customers in both group and individual settings, self-service resources are also available in Career Resource Areas in each PA CareerLink® comprehensive site. These resources include computers with Internet connections and software to help with résumé preparation and career exploration, as well as other resources that are all designed to assist individuals with job-search and career exploration, and to assist employers with workforce and human resource needs, and through the Web-based PA CareerLink® system .

CWDS, the PA CareerLink® Web-based operating system is the system of record for these services. To facilitate integration, partners share facilities, resources, technology platforms, job development teams, case management, job database, support services, application protocol and forms, assessment, employer services, outreach plans, performance and evaluation measures.

CWDS is built to be accessible to the most common accessibility technology in use by customers. CWDS allows employers to create job orders through self-service or staff-assisted service. In turn, job seekers have the ability to browse for jobs, review job orders and refer themselves to job openings on-line without PA CareerLink® staff assistance or in-person at a PA CareerLink® center with available staff-assisted services.

CWDS is available to anyone with access to a computer. CWDS is continually being enhanced to provide basic information such as, but not limited to, the locations of all the PA CareerLink® centers throughout the state, job postings, programs and services, including training; business and provider services; and events, such as workshops scheduled at the PA CareerLink® center. Job seekers and employers are also able to register through CWDS independently, or with assistance from PA CareerLink® staff.

CWIA

The L&I Center for Workforce Information & Analysis collects and analyzes data from the CWDS system to report performance and to identify issues. CWIA also analyzes huge stores of data to provide information about industrial, occupational, workforce and economic development trends, growth and factors impacting change. The information provided is key to developing workforce development plans that align with educational needs and economic development strategies.

BWDP

The L&I Bureau of Workforce Development Partnership (BWDP) is the agency designated as the state workforce administrator. BWDP is responsible for the administration of multiple WIA partner programs, coordinating programs with other departments and agencies and for providing fiscal and program oversight, technical assistance, and staff development services to the local boards and PA CareerLink® staff.

OVR

The PA Dept. of Labor & Industry (L&I) Office of Vocational Rehabilitation (OVR) administers the Vocational Rehabilitation (VR) program. OVR is a combined agency consisting of both Blindness and Visual Services and Vocational Rehabilitation Services. OVR provides Persons with Disabilities (PWDs) or individuals who have multiple disability related barriers to employment (including youth and adults) vocational rehabilitation services to help prepare for, obtain, or maintain employment. The Secretary of L&I represents OVR on the PA WIB; and the Secretary also ensures that the strategies described in the OVR annual state plan, as approved by the U.S. Dept. of Education Rehabilitation Services Administration, is implemented with stakeholder involvement.

Stakeholders

Stakeholders are entities having an interest in the workforce and economic development activities. The stakeholders may be system partners, industry organizations, employer organizations, cultural organizations, labor unions, interested individuals and others who potentially may be affected by changes to the workforce development system.

Appendix D – Formula Allocation Procedures

WORKFORCE INVESTMENT ACT OF 1998 FORMULA ALLOCATION PROCEDURES

As adopted by the Pennsylvania Workforce Investment Board, the following information provides a general overview of the commonwealth's Title I adult, youth and dislocated worker Local Area formula allocation procedures. These procedures, which were utilized beginning with the PY 2000 funding cycle, are consistent with the requirements of the Workforce Investment Act of 1998, as amended.

Adult and Youth Funds Allotted to States:

Training and Employment Guidance Letter (TEGL) 26-10 dated May 10, 2011 informed the States that Congress decreased the level of funds that the Governor may reserve for statewide activities by 10 percentage points to 5 percentage points. Until further notice, 5% will be reserved for statewide activities.

- 5% - 15% (maximum) is reserved for statewide activities (Includes 5% maximum for administration). States may merge the 15% set-aside for statewide activities from the three separate funding streams (dislocated worker, adult and youth).

TEGL 09-11 dated October 26, 2011 informed the States on distribution of WIA funds "within State Allocation" of Adult and Youth funds. Until further notice, Local Areas will be allocated 95% of the Adult and Youth funds based upon a statutory formula.

- 85% - 95% (minimum) is allocated to Local Areas based on a statutory formula. WIA provides States the option to formula allocate adult and youth funds to Local Areas based on a three-part formula (70% minimum) or to use an alternate discretionary (30% maximum) allocation procedure. Title I adult and youth funds designated for Local Areas will be allocated based on the three-part federal formula (two-thirds unemployed and one-third economically disadvantaged). The optional 30% discretionary allocation procedure will not be used at this time.

Allocation of Adult and Youth Funds to Local Areas:

The three-part formula for allocating 85% to 95% of the youth - Section 128 [b][2]; and adult - Section 133 [b][2] funds and TEGL(s) 26-10 & 09-11 is as follows:

Step 1

The process begins by determining the average number of individuals in the civilian labor force and unemployed for the most recent twelve-month reference period of July 1st through June 30th.

Once these numbers are calculated the Areas of Substantial Unemployment (ASU) are identified. By definition, an ASU is a contiguous area with a population of at least 10,000 individuals and an unemployment rate of at least 6.5%.

For Local Areas that have unemployment of 6.5% or greater, the civilian labor force and unemployment data is inserted directly into the allocation formula. For Local Areas that have unemployment less than 6.5%, an ASU search is performed. For reference, the ASU search process, as described below, is completed through a joint working venture between L&I's Center for Workforce Information and Analysis (CWIA) and the Bureau of Workforce Development Partnership (BWDP).

An ASU search is a procedure developed by the Federal Bureau of Labor Statistics to identify areas of substantial unemployment. County level unemployment data along with either census tract or municipal level unemployment data from the most recent census is used to determine the current unemployment rates for cities, townships, or census tracts.

Through this procedure (which can utilize either a subtraction or addition method) cities, townships or census tracts that border each other are joined together until the definition of an ASU is achieved. A Local Area can have more than one ASU within their geographic border, if the building method is used.

Once the ASU(s) is designated, the civilian labor force and unemployed totals for each Local Area's ASU are then inserted into the computer based allocation formula.

Step 2

The first third of funds is allocated on the basis of the number of unemployed in areas of substantial unemployment compared to the statewide total of such individuals. The unemployment data was previously determined in step 1.

The percentage share of funds is determined by dividing the number of unemployed in each Local Area with unemployment of 6.5% or greater, by the statewide total of unemployed in areas with unemployment of 6.5% or greater. The resulting percentage is then multiplied by one-third of the State's available allotment.

Step 3

The next third of funds is allocated on the basis of the number of unemployed individuals in excess of 4.5% of the civilian labor force in each Local Area compared to the total number of such individuals in the State.

As required by WIA, Section 128[b][2][B][iii] & 127[b][2][D] and 133[b][2][C][iii] & 132[b][1][B][v][VI] the "higher of" either the number of unemployed individuals in excess of 4.5% of the civilian labor force in the Local Area; **or** the number of unemployed individuals in excess of 4.5% of the civilian labor force in areas of substantial unemployment in the Local Area is calculated.

The excess number of unemployed over 4.5% of the civilian labor force is then totaled for the State. This statewide total is then divided into the number of excess unemployed in each Local Area to determine each Local Area's percentage share of funds. This percentage is then multiplied by one-third of the State's available allotment.

Step 4

The final third of funds is allocated based on the number of economically disadvantaged individuals in each Local Area compared to the statewide total of such individuals. The number of economically disadvantaged individuals is derived from the most recent federal census. Economically disadvantaged youth (age 16-21) and economically disadvantaged adults (age 22-72) are used for each respective funding stream.

Using federal census data, the percentage share is determined by dividing the number of economically disadvantaged for each Local Area by the statewide economically disadvantaged total. The resulting percentage for each Local Area is then multiplied by the final one-third of funds. The amount of funds for each third of the formula is then totaled for each Local Area.

Step 5

Prior to the minimum allocation percentage (commonly known as "hold-harmless") provision being applied, the total amount determined in the prior steps would be each Local Area's allocation. In accordance with the WIA Sections 128[b][2][A][ii] and 133[b][2][A][ii], the Local Area adult and youth formula allocation process will include a minimum hold-harmless provision.

The hold-harmless provision ensures that a Local Area will not be allocated funds that are less than 90% of their average allocation percentage for the prior two years. Utilization of this authority, combined with the WIA's requirement that a hold-harmless percentage be applied after the first two years of implementation, means that Local Area adult and youth allocations will continue to include the critical hold-harmless provision. The utilization of the hold-harmless provision will stabilize Local Area funding and minimize service disruptions.

The next step is then to apply the hold-harmless provision to the allocations. This is done by first combining each Local Area's allocation (excluding transfers or unexpended funds) for the previous two years. The Local Area's two-year combined allocation is then divided by the

statewide two-year combined allocation to determine the relative share percentage of funds that each Local Area received for the two reference years.

Ninety percent of the relative share percentage is then calculated to establish the minimum percentage share that each Local Area must receive in the formula allocation process.

Step 6

Using the base allocations determined in steps 2, 3 and 4, each Local Area's percentage share of funds is calculated by dividing each Local Area's allocation amount by the statewide total.

Step 7

This step calculates the minimum dollar amount of funds each Local Area is to receive based on the hold-harmless provision. This is determined by multiplying the 90% relative share percentage determined in step 5, by the statewide allotment. The resulting figure establishes the minimum amount of funds that each Local Area will receive under the formula allocation process.

Step 8

Local Areas with a relative share percentage that is less than the 90% minimum hold-harmless percentage are identified by comparing the percentage share determined in step 6, to the 90% minimum hold-harmless percentage determined in step 5.

The funds needed to bring the Local Areas with percentages below the mandated minimum into compliance comes from the Local Areas who have a percentage share of funds which is above the mandated minimum percentage. Funds are subtracted (on a prorated basis) from the Local Areas that exceed the minimum percentage to bring the other Local Areas that are below the minimum percentage into compliance with the hold-harmless provision.

The Local Area allocations and relative share percentages are then recalculated to determine whether each Local Area received the 90% minimum allocation percentage.

This step is repeated as many times as is necessary to comply with the minimum allocation percentage provision. Compliance with this provision completes the formula allocation process.

Dislocated Worker Funds Allotted to States:

TEGL 26-10 dated May 10, 2011 informed the States that Congress decreased the level of funds that the Governor may reserve for statewide activities by 10 percentage points to 5 percentage points. Until further notice, 5% will be reserved for statewide activities.

- 5% - 15% (maximum) is reserved for statewide activities (Includes 5% maximum for administration). States may merge the 15% set-aside for statewide activities from the three separate funding streams (dislocated worker, adult and youth).

- 25% (maximum) is reserved for statewide rapid response activities.

TEGL 09-11 dated October 26, 2011 informed the States on distribution of WIA funds "within State Allocation" of Dislocated Worker funds. Until further notice, Local Areas will be allocated 70% of the Dislocated Worker funds based upon a formula prescribed by the Governor.

- 60% - 70% (minimum) is allocated to Local Areas based on an allocation formula prescribed by the Governor. The formula shall include, but is not limited to, the following data factors mandated by the Act - Section 133[b][2][B][ii]:

  [1] Insured unemployment;
  [2] Unemployment concentrations;
  [3] Plant closing and mass lay-off;
  [4] Declining industries;
  [5] Farmer-rancher economic hardship; and
  [6] Long-term unemployment.

Allocation of Dislocated Worker Funds to Local Areas:

The commonwealth has reviewed various options to formula allocate the dislocated worker 60% - 70% funds to Local Areas. Therefore, the following data factors, data sources, percentage weights, and calculation methods:

- Meet the spirit of the law;

- Provide a balance between distributing funds on an equal basis for the dislocated workers in each area and distributing funds based on local economic conditions;

- Provide areas with large numbers of dislocated workers with funds to maintain a baseline level of assistance to dislocated workers;

- Provide Local Areas where a relatively large portion of the labor force are dislocated workers with funds to offer the additional training and services needed to reemploy these workers; and

- Utilize the most appropriate data available.

The data used to calculate the 60% - 70% dislocated worker Local Area allocations is provided by L&I's CWIA.

County level data for the most recent 12-month program year is entered into the computerized formula.

In order to provide a balanced distribution of funds, one-half of the funds are allocated on a relative share percentage basis and one-half on a proportional basis. Specifically, the insured unemployment, unemployment concentrations, plant closings and mass lay-off and farmer-rancher factors are calculated on a relative share percentage basis. For example, the number of insured unemployed for the Local Area is divided by the statewide number of insured unemployed to determine the relative share percentage for that factor. Conversely, the declining industries, long-term unemployment and dislocated workers factors are calculated on a proportional percentage basis of each Local Area's civilian labor force. For example, the number of dislocated workers for the Local Area is divided by the civilian labor force for that Local Area to determine the percentage of dislocated workers in proportion to that area's civilian labor force.

Using the Local Area data, the computerized formula calculates the Local Area's relative or proportional percentage share for each factor. For the relative factors, the percentage share for each Local Area is first multiplied by the percentage weight assigned to each factor and then by the statewide 60% - 70% dislocated worker allocation figure to determine the dollar amount for each relative factor. For the proportional factors, the percentage share for each Local Area is totaled. The resulting percentage is then divided into each Local Area's proportional percentage share and then multiplied by the percentage weight assigned to each factor and then the statewide 60% - 70% allocation to determine the Local Area dollar amount for each factor. The Local Area's allocation amount for each factor is then added together to determine the Local Area's total dislocated worker allocation. The Act does not mandate that a minimum funding percentage (similar to the adult and youth hold-harmless provision) be applied to the dislocated worker allocations.

In addition to the six federally mandated factors, the commonwealth has added the dislocated worker data factor to the formula.

Each formula factor and the corresponding data source and percentage weight assigned to each factor are as follows:

FACTOR	DATA SOURCE	PERCENTAGE WEIGHT
Insured Unemployed	Continued Unemployment Compensation Claims	10%
Unemployment Concentrations	Number of Unemployed Over 4.5%	20%
Plant Closing and Mass Lay-off	Number of Workers Affected by Mass Lay-off and Plant Closures	15%
Declining Industries	Employment in Industries Projected to Lose 10% of Employment	10%

	Between 1995 – 2005	
Farmer-Rancher Economic Hardship	Cash Receipts by Farm Yr to Yr Change	5%
Long-Term Unemployment	Number of Claimants Exhausting Unemployment Compensation Benefits	17%
Dislocated Worker (State added factor)	Estimated Number of Dislocated Workers	23%

Appendix E – Workforce Program Activities

WIA ADULT AND DISLOCATED WORKER SERVICES

PRIORITY POLICY (Adult)

- ❑ LWIA Priority Service **(PS01)**

CORE SERVICES (Staff-Assisted)

- ❑ Staff-Assisted Job Search and Placement Assistance, Including Career Counseling **(CS01)**
- ❑ Follow-up Services, Including Counseling Regarding the Workplace **(CS02)**
- ❑ Staff-Assisted Job Development (Working with Employer and Job Seeker) **(CS03)**
- ❑ Staff-Assisted Workshops and Job Clubs **(CS04)**
- ❑ Staff-Assisted Job Referrals (Such as Testing and Background Checks) **(CS05)**
- ❑ Other **(CS06)**

INTENSIVE SERVICES

- ❑ Comprehensive and Specialized Assessments of Skill Levels and Service Needs Including Diagnostic Testing and Use of Other Assessment Tools; and In-Depth Interviewing and Evaluation to Identify Employment Barriers and Appropriate Employment Goals **(IS01)**
- ❑ Full Development of an Individual Employment Plan (IEP) to Identify the Employment Goals and Appropriate Combination of Services for the Participant to Achieve Employment Goals **(IS02)**
- ❑ Group Counseling **(IS03)**
- ❑ Case Management for Participants Seeking Training Services **(IS04)**
- ❑ Individual Counseling and Career Planning **(IS05)**
- ❑ Relocation Assistance **(IS06)**
- ❑ Out-of-Area Job Search Assistance **(IS07)**
- ❑ Follow-up Services, Including Counseling for Registrants (Those Previously Receiving Intensive/Training Services) After Entering Employment **(IS08)**
- ❑ Basic Computer Literacy Skills **(IS09)**
- ❑ Other **(IS10)**
- ❑ Short-term Prevocational Services, Including Development of Learning Skills, Communication Skills, Interviewing Skills, Punctuality, Personal Maintenance Skills, and Professional Conduct to Prepare Individuals for Unsubsidized Employment or Training **(IS11)**
- ❑ Internships **(IS12)**
- ❑ Work Experience **(IS13)**
- ❑ Literacy Activities Related to Basic Workforce Readiness **(IS14)**

- ❑ Temporary Jobs **(IS15)** [applies to only the WIA Disaster Grant Program]

TRAINING SERVICES

- ❑ Occupational Skills Training **(TS01)**
- ❑ On-the-Job Training **(TS02)**
- ❑ Workplace Training and Cooperative Education Programs **(TS03)**
- ❑ Private Sector Training Programs **(TS04)**
- ❑ Skill Upgrading and Retraining **(TS05)**
- ❑ Entrepreneurial Training **(TS06)**
- ❑ Job Readiness Training **(TS07)**
- ❑ Adult Education and Literacy Activities (Offered in Combination With Other Training Services Not Including Customized Training) **(TS08)**
- ❑ Customized Training **(TS09)**
- ❑ Partner Program Funded Training **(TS10)** – training funded by a partner program (e.g., TAA)
- ❑ Special Programs Training **(TS11)** – (can only be applied to the WIA Adult Program and the Wall Street West or CAA funding stream)
- ❑ Participant Refused Training **(PRTR)**

ASSESSMENT TESTING SERVICES

- ❑ ABLE **(AT01)**
- ❑ BEST **(AT02)**
- ❑ BEST Plus **(AT03)**
- ❑ CASAS (ESL) **(AT04)**
- ❑ CASAS (Life Skills) **(AT05)**
- ❑ TABE (7-8) **(AT07)**
- ❑ TABE (9-10) **(AT08)**
- ❑ WorkKeys **(AT09)**
- ❑ Participant Refused Assessment Testing **(PRAT)**

SUPPORTIVE SERVICES (Adult and Dislocated Worker)

- ❑ Transportation **(SS01)**
- ❑ Child Care **(SS02)**
- ❑ Dependent Care **(SS03)**
- ❑ Housing **(SS04)**
- ❑ Needs Related Payments **(SS05)**
- ❑ Needs Based Payments **(SS06)**
- ❑ Stipend **(SS07)**
- ❑ Assistance with Uniforms or Other Appropriate Attire and Work-Related Tool Costs, Including Such Items as Eyeglasses and Protective Eye Gear **(SS08)**

- ❑ Other1 **(SS09)**
- ❑ Other2 **(SS10)**
- ❑ Other3 **(SS11)**
- ❑ Other4 **(SS12)**
- ❑ Other5 **(SS13)**

FOLLOW-UP SERVICES (Adult and Dislocated Worker)

- ❑ Staff-Assisted Job Search and Placement Assistance, Including Career Counseling **(CF01)**
- ❑ Follow-up Services, Including Counseling Regarding the Workplace **(CF02)**
- ❑ Staff-Assisted Job Development (Working with Employer and Job Seeker) **(CF03)**
- ❑ Staff-Assisted Workshops and Job Clubs **(CF04)**
- ❑ Staff-Assisted Job Referrals (Such as Testing and Background Checks) **(CF05)**
- ❑ Other **(CF06)**
- ❑ Follow-up Services, Including Counseling for Registrants (Those Previously Receiving Intensive/Training Services) After Entering Employment **(IF08)**

WIA YOUTH (14-21) SERVICES

YOUTH PROGRAM REQUIREMENTS

- ❑ Youth Objective Assessment, Service Strategy, Reading and Math Levels **(YR01)**

YOUTH EDUCATIONAL ACHIEVEMENT SERVICES

- ❑ Tutoring, Study Skills Training, and Instruction Leading to Completion of Secondary School (Including Dropout Prevention Strategies) **(YS01)**
- ❑ Alternative Secondary School Services **(YS02)**

YOUTH EMPLOYMENT SERVICES

- ❑ Work Experience (Paid and Unpaid) **(YS03)**
- ❑ Internship **(YS04)**
- ❑ Job Shadowing **(YS05)**
- ❑ Occupational Skills Training **(YS06)**
- ❑ On-the-Job Training **(YS07)**
- ❑ Participant Refused Training **(PRTR)**

ADDITIONAL SUPPORT FOR YOUTH SERVICES

- ❑ Adult Mentoring **(YS08)**
- ❑ Comprehensive Guidance and Counseling **(YS09)**

YOUTH LEADERSHIP DEVELOPMENT OPPORTUNITIES

- ❑ Youth Leadership Development Opportunities **(YS10)**

YOUTH SUMMER EMPLOYMENT OPPORTUNITIES

- ❑ Summer Employment Opportunities Directly Linked to Academic and Occupational Learning **(SM01)**
- ❑ Summer Services for Academic – Basic Educational Skills Enrichment **(SM02)**

ASSESSMENT TESTING SERVICES

- ❑ ABLE **(AT01)**
- ❑ BEST **(AT02)**
- ❑ BEST Plus **(AT03)**
- ❑ CASAS (ESL) **(AT04)**
- ❑ CASAS (Life Skills) **(AT05)**
- ❑ TABE (7-8) **(AT07)**
- ❑ TABE (9-10) **(AT08)**
- ❑ WorkKeys **(AT09)**
- ❑ Participant Refused Assessment Testing **(PRAT)**

YOUTH SUPPORTIVE SERVICES

- ❑ Linkages to Community Services **(YS20)**
- ❑ Assistance with Transportation **(YS21)**
- ❑ Assistance with Child Care and Dependent Care **(YS22)**
- ❑ Assistance with Housing **(YS23)**
- ❑ Referral to Medical Services **(YS24)**
- ❑ Assistance with Uniforms or Other Appropriate Attire and Work-Related Tool Costs, including Such Items as Eyeglasses and Protective Eye Gear **(YS25)**
- ❑ Youth Stipend **(YS26)**
- ❑ Other1 **(YS27)**
- ❑ Other2 **(YS28)**
- ❑ Other3 **(YS29)**
- ❑ Other4 **(YS30)**
- ❑ Other5 **(YS31)**

YOUTH FOLLOW-UP SERVICES (during WIA Participation)

- ❑ Leadership Development and Supportive Services Activities **(YP01)**
- ❑ Regular Contact with a Youth Participant's Employer, Including Assistance in Addressing Work-Related Problems that Arise **(YP02)**

- Assistance in Securing Better Paying Jobs, Career Development, and Further Education **(YP03)**
- Work-Related Peer Support Groups **(YP04)**
- Adult Mentoring **(YP05)**
- Tracking the Progress of Youth in Employment After Training **(YP06)**

YOUTH FOLLOW-UP SERVICES (after WIA Hard Exit)

- Leadership Development and Supportive Services Activities **(YF01)**
- Regular Contact with a Youth Participant's Employer, Including Assistance in Addressing Work-Related Problems that Arise **(YF02)**
- Assistance in Securing Better Paying Jobs, Career Development, and Further Education **(YF03)**
- Work-Related Peer Support Groups **(YF04)**
- Adult Mentoring **(YF05)**
- Tracking the Progress of Youth in Employment After Training **(YF06)**

Welfare CWDS Workforce Development Activities

SERV_CODE	SERVICE DESC
01	JOB RETENTION
06	PROVIDING CHILD CARE FOR A COMMUNITY SERVICE PARTICIPANT
09	ASSESSMENT/EDP FOOD STAMP CLIENTS ONLY
11	ENGLISH AS A SECOND LANGUAGE (ESL)
12	ADULT BASIC EDUCATION (ABE)
13	GED/HIGH SCHOOL
14	COMMUNITY COLLEGE
15	ADVANCED DEGREE PROGRAM
16	TANF POST SECONDAY EDUC
18	SATISFACTORY ATTEND. IN SEC. SCHOOL/GED
19	KEYS Exception Enrollment
20	COMMUNITY SERVICE
21	WORKFARE
22	ON-THE-JOB TRAINING (OJT)
23	SUBSIDIZED EMPLOYMENT
24	SKILL/VOCATIONAL TRAINING
26	PAID WORK EXPERIENCE (PWE)
28	JOB READINESS PREP
29	INTERNSHIP SNAP PROGRAM
31	WORK STUDY
32	AMERICORPS VISTA
33	UNSUBSIDIZED EMPLOYMENT
34	NON-CORE VOC ED CLIENT NO HS DIPLOMA/GED

35	NON-CORE VOC ED CLIENT W/HS DIPLOMA/GED
36	STATE OFFICE WORK EXP STAND ALON
38	SKILLS TRAINING DIRECTLY RELATED TO EMPLOYMENT
42	CONTRACTED JOB SEARCH/PREP TRAINING
46	60-DAY SNAP-ONLY JOB SEARCH
49	REHABILITATIVE SERVICES
51	VOCATIONAL WORK EXPERIENCE
92	CASE MANAGEMENT PROVIDED TO ELECT STUDENTS
99	RELATED ACTIVITIES/BARRIER REMEDIATION

OVR CWDS Workforce Development Activities

00	Assessment
00	Diagnosis and Treatment of Impairments
00	Information and Referral
00	Job-Related Services: Job Placement Assistance
00	Job-Related Services: Job Search Assistance
00	Job-Related Services: On-the-Job Supports
14	Vocational Rehabilitation Counseling & Guidance
16	Physical & Mental Restoration
17	Training: High School
18	Training: Job coaching, driver training, trade, tech and or business schools
19	Training: Job Readiness
00	Training: Basic Academic Remedial or Literacy Training
01	Training: College or University
02	Training: Disability-Related Augmentative Skills Training
03	Training: Occupational/Vocational Skills Training
04	Training: On-the-Job Training
05	Technical Assistance Services
06	Personal Assistance Services: Interpreter Services
07	Personal Assistance Services: Personal Attendant Services
08	Personal Assistance Services: Reader Services
00	Transportation Services
19	College Certificate
29	College Associate Degree
39	College Bachelor Degree
22	In Employment
26	Closed Rehabilitated e.g. successful employment in IPE identified Occupational Goal for 90 days or longer
32	Post Employment Services
34	Post Employment Closure
00	Maintenance
00	Other Services

PA CAREERLINK®

LABOR EXCHANGE

POLICIES & PROCEDURES MANUAL

GENERAL POLICIES AND INFORMATION

REGISTRATION

The Labor Exchange/Employment Services portions of the Commonwealth Workforce Development System (CWDS) support the employment service functions for PA CareerLink® staff. The information collected serves Wagner-Peyser and Veterans' Employment & Training (VET) reporting. Many of the data collection requirements for customers receiving staff-assisted services are dictated by U.S. Department of Labor (USDOL) regulations; additional items are collected to support good program management practices. Labor Exchange activities and services for jobseekers and employers may be provided by any PA CareerLink® staff, regardless of agency, program, or funding stream.

Registration for staff-assisted labor exchange services for jobseeker customers primarily supports the funding requirements of the Wagner-Peyser and VET regulations. Because of these regulations, the Bureau of Workforce Development Partnership (BWDP) takes the lead in providing policies, procedures, and data elements for the labor exchange portions of CWDS. All PA CareerLink® staff that provide staff-assisted labor exchange services have access to labor exchange functions in CWDS. To maintain access, staff must follow established procedures for data collection because the data is reported to USDOL.

All jobseekers must provide enrollment-level data. Programs, including New Directions, Veterans, and Unemployment Compensation (UC) Profiling require data collection for employment services registration. Jobseeker services provided by PA CareerLink® staff, including assessment services, case management services, individual counseling, job development, job search workshops, and job search plans also require registration. Special, targeted groups of jobseeker customers – Veterans, permanently-separated UC claimants, and Migrant & Seasonal Farm Workers – must receive staff-assisted service for registration. Other jobseeker customers may be required to receive staff-assisted services based on the policies set for specific programs.

Additional information required for employment service registration includes:

- Race and Ethnicity
- Labor force status at time of participation
- Unemployment Insurance status at time of participation
- Education level status at time of participation
- Military status at time of participation
- Disability status at time of participation
- Migrant and Seasonal Farm Worker characteristics

The responses to the above supply data for education and employment status as related to USDOL reporting requirements. Additionally, the employer *Company Profile* in CWDS must include industrial and occupational coding, information for screening jobseekers (prior to a job posting referral), and job posting information that must be submitted to meet USDOL reporting requirements.

INFORMATION SHARING

CWDS is a shared data system for tracking and reporting services provided by:

- Department of Labor and Industry, Bureau of Workforce Development Partnership (BWDP)
- Department of Labor and Industry , Office of Vocational Rehabilitation (OVR)

- Department of Public Welfare, Bureau of Employment and Training Programs (BETP)

Access to CWDS by commonwealth employees, as well as by business partners, requires the completion of a CWDS User Agreement and Access Form (WDP-40). The agreement outlines the policy for the disclosure of confidential data and information maintained in CWDS. The form authorizes staff access to an integrated system involving data and information, which is processed, stored, maintained, or transmitted on CWDS for the commonwealth.

PA CareerLink® CWDS information concerning employers, jobseekers, and job openings is to be accessible to all partners with an approved PA CareerLink® CWDS data-sharing agreement. This policy ensures that all staff have equal opportunity to serve all customers.

When an employer does not self-register, all employer registration information must be entered by staff into CWDS within 48 hours of receipt of the information.

All job postings must be entered into CWDS within 24 hours of receipt of the posting. A *Participant Match* should be done immediately upon entry of the job posting. This applies to all staff-assisted job postings from all employers. All PA CareerLink® staff should have equal access to job postings received by all partners to ensure the best customer service. For employers who desire to remain confidential, staff must not reveal the employer name on the CWDS job posting and must provide instructions for referring only through the local PA CareerLink® office or *Job Posting Referral* list. The employer is the customer, and all PA CareerLink® staff must follow the referral instructions specified by the employer.

LABOR EXCHANGE VALUE-ADDED SERVICES AND COMMON MEASURES

Value-Added Services

Jobseeker enrollment information must be entered into CWDS within 48 hours of receipt of information. A match for job postings should be done for each jobseeker immediately upon entry of the information, and the jobseeker should be notified of any positive results.

A jobseeker who: requests staff assistance for employment services; is within a targeted group; or is eligible for a specific program that requires staff to provide services is given service through the staff-assisted method. Staff-assisted services are specific to the customer's needs, add value, and may be delivered either in one-on-one or small-group sessions.

Value-Added services are those service activities that require significant staff involvement beyond self-service and informational activities and will create or extend participation in a program under Common Measures. Significant staff involvement in a workforce setting includes a staff member's assessment of a jobseeker's skills, education, or career objectives in order to achieve any of the following:

- Assist jobseekers in deciding on appropriate next steps in the search for employment, training, and related services including job referral
- Assist jobseekers in assessing their personal barriers to employment
- Assist jobseekers in accessing other related services necessary to enhance their employability and individual employment-related needs

A jobseeker who receives this level of service has received a service that involves a significant level of staff involvement, and, therefore, this jobseeker will be included in the performance measures calculations. The ultimate goal of value-added services is to help jobseekers enter and retain employment and to help employers secure qualified jobseekers for their job openings.

Value-added services, as well as the Profile Reemployment Program (PREP) and Veterans' programs, create an Employment Services registration under the Wagner-Peyser Act. Examples of value-added, staff-assisted services include:

- Job search assistance, including workshops and job clubs
- Job development assistance
- Job referrals
- Job posting-taking
- Referral follow-up
- Job posting maintenance
- Referral support
- Interview support

An *Office Contact* service can be entered by PA CareerLink® staff to the jobseeker's Service Record to indicate contact with the PA CareerLink® office.

For registered jobseeker customers, the following employment services are available:

- Job search and placement assistance
- Labor market information (local, regional, and statewide) related to the jobseeker
- Referral to support services
- Career counseling
- Needs and interest assessment
- Proficiency testing
- Job development, including working with an employer and jobseeker
- Staff-assisted workshops and job clubs
- Full development of individual employment plan
- Group counseling
- Individual counseling and career planning
- Case management
- Short-term, pre-vocational services
- Follow-up services, including counseling after entering employment
- Linkage groups and activities with other, similar customers
- Seminars and informational workshops

Common Measures

Common Performance Measures (CM) is USDOL's method of standardizing performance guidelines across multiple programs and funding streams. CM are used by USDOL to evaluate states and one-stop systems for effectiveness; they streamline and add consistency to workforce performance measures. Outcomes/results directly impact all workforce programs that are federally funded. A "participant" under CM is an individual who meets any one of three definitions:

- receives a value-added service, OR

- performs a Self-Service job search on CWDS while logged in under a Participant Keystone ID, OR
- has been determined eligible to receive WIA funding

NOTE: Services rendered through OVR and/or BETP in CWDS do not impact on Common Measures unless the information is also entered as a partner program.

The Labor Exchange Service Catalog and Program Eligibilities (Appendix B) lists all available Labor Exchange services. It also indicates whether a service is "value-added" (creates or extends Program Participation).

VETERAN PRIORITY AND PREFERENCE

The USDOL policy provides that, in filling employers' job postings, qualified veterans will be given priority over non-veterans for job openings. With respect to Special Disabled Veterans, the policy states that the local office's management and its Veterans' Representatives should ensure that all staff in the office give preferential treatment to Special Disabled Veterans. The order of priority to job openings is as follows:

- Special Disabled Veterans
- Disabled Veterans
- Newly-Separated Veterans
- Other Veterans with Campaign Badge or Armed Forces Service Medal
- Other Veterans with non Campaign Badge
- Covered Veterans
- Eligible Persons
- Non-Veterans

CWDS is designed so that when a *Participant Match* is performed against a job posting by either staff or an employer, the jobseekers will be listed in the above order on the match results.

CIVIL SERVICE APPLICATION

Civil Service job information and applications are available to jobseekers at all PA CareerLink® offices. At least one staff person in each office should be able to provide advice and information on applying for Civil Service positions, and Civil Service Announcements should be displayed in the Career Resource Area.

To facilitate tracking of Civil Service hires, every hard-copy Civil Service application form should be marked with the three-letter PA CareerLink® office code on the *Employment Questionnaire* page in the block marked "Official Use Only". When assisting a jobseeker with the online application, staff should instruct the jobseeker to answer "PA CareerLink®" to the question "How did you first learn about this test?"

When a jobseeker receives assistance with Civil Service, staff are to record the service in the jobseeker *Service Record* by adding the Service "ES and DVOP/LVER" under the Service Category *Some Reportable Service*. A comment should be entered as "Civil Service application." "ES and DVOP/LVER" will not create a program registration for the jobseeker.

CUSTOMER SUPPORT REQUESTS

PA CareerLink® staff with the *AP-SupportRequestAdmin* role assignment (Request Admin) in CWDS are able to view office-specific support requests routed to their office provided through the *Contact Us* menu. There should be at least two staff members (primary and back-up) in each office with the Request Admin role. To view which staff in an office have the role, select the *Search* menu > *CWDS Staff Search*. Select *AP-SupportRequestAdmin* from the *Role* dropdown list. Select the appropriate county and click the "Get Office" button. Select the appropriate office and click the "Search" button. Labor Exchange Coordination Services can view support requests routed to any local office.

Support requests are routed to the appropriate PA CareerLink® office based on the zip code provided by the user on the *Contact Us* screen. If the zip code is not mapped to a local office, Labor Exchange Coordination Services will receive these and re-route them to the appropriate PA CareerLink® office. Support requests with category set to "Disability Related Services" are routed to OVR, regardless of zip code. Support requests with category set to "Job Training - Welfare Related" are routed to BETP, regardless of the zip code. The "Status" of a support request is defined as one of the following:

- New – a support request that has not yet been viewed and no action has been taken
- Pending – a support request that has been viewed and is awaiting an action
- Closed-Resolved – a closed support request that meets the submitter's satisfaction
- Closed-Unresolved – refers to a closed support request that, while the request has been handled properly, does not give the submitter his/her preferred response (e.g., Submitter wants Participant ID number changed to his/her Driver's License number. However, CWDS generates the PID, and staff cannot change it. The explanation does not satisfy the submitter.).

Support requests are to be searched at least once each workday. The *Support Request* option is listed under the *Staff Functions* menu item only for those staff with the Request Admin role. By default, CWDS displays all new support requests for the PA CareerLink® office of the Request Admin staff.

Staff should address all New and Pending requests as quickly as possible; all support requests should be completed and closed within 48 hours. If the category chosen by the submitter is incorrect, update the category and click the "Submit" button at the bottom of the screen. To allow another staff person to respond to a support request, use the *Forward Support Request* section; add the staff's email address; and include "Additional Comments" in the text box if appropriate; and click the "Forward" button. (If comments are included, use the "Check Spelling" button.)

The *Forward Support Request* feature is **not** used to respond to the submitter. It is the responsibility of the staff to whom the request has been forwarded to complete the request and notify the office's Request Admin. The Request Admin should then close the request in the system. CWDS retains only the name of the last person to whom a request has been forwarded. To respond to the submitter and ensure individual privacy, the PA CareerLink® office's email resource account should be used, as it allows all responses to be stored in a common folder (Outlook Sent folder). Staff with the *Local Office System Admin* role assignment in CWDS have access to and permissions for the resource accounts associated with their PA CareerLink® office.

STAFF SUPPORT REQUESTS

To resolve CWDS or programmatic issues and questions that may arise in PA CareerLink® offices in a timely manner, the following procedures are to be followed.

Do NOT call the LINKS Help Desk for the following issues:

- Participants with incomplete/partial SSNs
- Duplicate Participant or Employer registrations
- Participants, Employers, or Providers who cannot log in
- Users who are "locked out" of CWDS

LINKS Help Desk staff are unable to assist with these issues. Contacting LINKS significantly delays problem resolution as BWDP staff in Harrisburg must follow LINKS procedures before assisting PA CareerLink® staff. Instead, issues and inquiries should be emailed to the Resource Account for Labor Exchange Coordination Services: ra-li-bwdp-lxstaff@state.pa.us. All Labor Exchange Coordination Services staff have access to this email account and can respond to inquiries.

Examples of issues to be emailed to the Labor Exchange resource account include:

- Participants with incomplete/partial SSNs
- Duplicate Participant or Employer registrations
- Participants or Employers who cannot log in
- Participants or Employers who are "locked out" of CWDS
- Employer and job posting related issues
- Labor Exchange program-related questions

EMPLOYER PROCESSES

EMPLOYER SERVICES

Employer services are an integral component of the PA CareerLink® system. Providing quality services to the employer community results in better career opportunities for jobseekers and improves the local and regional economy. The Employer module in CWDS provides a mechanism for reporting the services provided by PA CareerLink® offices and how service delivery meets the needs of employer customers. All employer services provided by staff should be recorded in CWDS. When staff record a service provided to an employer, the table in Appendix C should be followed as a guide for selecting the most appropriate service.

When contacting employers to obtain results for office referrals, staff should also inquire about the self-referred jobseekers in order to assist the employer in maintaining the job posting records. This contact should also be recorded as a service in the employer's *Company Profile Service Record*.

All outcomes reported to staff by employers must be recorded, and, in cases where the employer has not reported results in a timely manner, information provided by the jobseeker must be recorded.

CWDS also provides employers with the ability to request contact for services in which they are interested. Requests for services can be initiated by the employer during the *Company Profile* creation process or from the *Employer Services Offered* list under the *Detailed Profile* menu while s/he is logged in to the employer *Company Profile*. When an employer selects "Yes" for a service in the selected column of the *Employer Services Offered* list, the request will display in a search for *Employer Services Requested* for the PA CareerLink® office to which the employer is assigned based on zip code. To conduct a search, select *Search*, then *Employer*, *Employer Record* while logged in as staff. On the

Employer Search screen, select the county and PA CareerLink® office of assignment. In the *Search Employer by Service* section, staff should select "Workforce" from the *WPA of Services the Employer Requested* drop-down list. A selection can be made from the *Services Employer Requested* drop-down, but it is recommended that "All" be used so that all requested services can be viewed. This search should be done on a daily basis and a follow-up contact should be made to the employer who has requested the service within 48 hours.

When staff record a corresponding service in the *Employer Service* record, CWDS turns the "Yes" selection made by the employer to "No" and removes the service from the *Employer Services Requested* search results. Appendix C displays the "Employer Service Requested" and the corresponding "Employer Service Provided". Staff can and should record all employer services provided – whether or not the service was formally requested.

When an employer requests *Job Posting* listing from the *Employer Services Offered* list, the approval of a new job posting after the date of the service request removes that service from the search for *Employer Services Requested.*

EMPLOYER VERIFICATION

Employer verification is a daily process. The list of *Pending Employers* to be verified must be reviewed every day, and all employers appearing on the list must be approved or rejected, as appropriate, within 2 business days. Staff are to check for existing employer registrations prior to approving a new registration.

In **all** cases, PA CareerLink® staff will call the employer to verify that the employer did enter the information in CWDS and to prevent duplicate registrations. There have been occasions where, because the employer name was recognizable, staff immediately approved the *Company Profile*. Later, it became known that a disgruntled employee had created the *Profile* and used it for illegitimate purposes. The call may be used to welcome the employer to the PA CareerLink® system and to promote and offer other business services. If satisfied that this is a valid employer, PA CareerLink® staff should change the approval status from "Pending" to "Approved" and provide the following required information in the *Company Profile Details* fields:

- North American Industrial Classification System (NAICS) Industry Category, Sub Sector and Group Code
- Ownership Status
- Federal Contracting Job Listing Status
- Affirmative Action Status

If unable to verify the employer through available contact methods, PA CareerLink® staff should change the approval status to "Rejected" and document the methods used to contact the employer as well as the reason for rejection.

IMPORTANT: All employers using the PA CareerLink® system must agree to the following items prior to being approved to post job postings on CWDS:

- An employer **is not** eligible to register on CWDS if it requires any monetary investment from a jobseeker, charges a fee to the jobseeker, or attempts to fill a position involved in a job dispute.
- An employer **cannot** make commercial use of CWDS or information from CWDS in commerce, marketing, advertising, or publicity.

- An employer **cannot** use CWDS to recruit self-employed or subcontracted individuals. All listed job openings must be W-2 reported positions.
- An employer **cannot** use the System solely to build a database of jobseekers. Posted job openings must be for valid openings.
- An employer **cannot** use CWDS to discriminate against any job applicants. The Pennsylvania Human Relations Act (43 P.S. § 951, et seq.) provides that it is illegal for an employer or employment agency to print, or circulate or cause to be printed or circulated a statement, advertisement, or publication or to use an employment application that expresses, directly or indirectly, a preference, limitation, specification, or discrimination as to sex, age, non-related handicap or disability, the use of a guide or support animal because of the blindness, deafness or physical handicap of the user, race, religious creed, ancestry, color or national origin, unless based upon a bona-fide occupational qualification.

Employers must use W2 forms to report wages; 1099 forms are not acceptable. Employers cannot recruit, through PA CareerLink® offices, for the following types of positions: "pyramid"-type sales, those requiring a monetary investment on the part of the jobseeker, self-employment, or those involved in a labor dispute. If the employer is seeking to recruit for any of the above types of positions, staff should thank the employer for his/her interest but inform him/her that PA CareerLink® offices are not permitted to accept such openings.

If a phone call is not possible, PA CareerLink® staff should use any/all of the following methods to verify whether an employer is valid:

- Contact Unemployment Compensation Employer Tax Services (Field Accounting) and ask the representative to check whether the employer is registered with the Bureau of Employer Tax Operations (BETO) or has a PA-100 on file. To find the local Field Accounting office, go to http://www.dli.state.pa.us; click on the appropriate area of the map; click on the appropriate county. Scroll down to UC Employer Tax Services for the contact information. BETO may also be able to provide the employer's assigned NAICS Code.
- If the employer has provided a website address, access the site for validating information.
- Look up the employer in the telephone book, http://www.yellowpages.com, http://www.yellowbook.com, http://www.411.com, http://www.smartpages.com, and/or http://www.whitepages.com or similar web-based directories.
- Pennsylvania-based employers may be searched using the PA Department of State's Corporation Search at http://www.dos.state.pa.us/corps/site/default.asp.

If staff believes the employer is valid but the Federal Employer Identification Number (FEIN) looks suspicious (e.g., a Social Security Number [SSN] rather than FEIN), and the employer has not provided a UC Tax ID, follow procedures for referral to BETO Field Accounting Service to obtain the correct FEIN.

A SSN is acceptable as a FEIN for a private household hiring temporary help (e.g., grass-mowing, snow-shoveling on a limited basis). In such cases, confirm that "Yes" has been selected for the *Domestic Employer* field. A SSN is also acceptable from a non-domestic employer if the employer has not yet received its FEIN. In that case, however, the SSN may only be used for a period of 30 days, after which it must be changed to a FEIN.

Staff cannot accept all zeros or obviously-fake FEINs (e.g., 123456789 or 987654321). To prevent duplicate *Company Profile* records, all PA CareerLink® staff should use the FEIN **and** company name to check CWDS and see if the employer already has a *Company Profile* registration. If there is an existing *Company Profile*, inform the employer that s/he is already registered and assist the employer with logging in to the existing *Company Profile*.

If satisfied that the employer is valid, is recruiting for allowable types of positions, and entered the information, staff should change the approval status from "Pending" to "Approved." Otherwise, change the approval status from "Pending" to "Rejected" and record the reason for rejection.

After an employer *Company Profile's* approval status has been changed to "Approved" or "Rejected", an email notification is automatically sent by CWDS to all active employer contacts (with email addresses) associated with that *Company Profile* informing them that the *Company Profile* has been approved or rejected.

For security reasons, **under no circumstances** should an unknown employer be verified without checking to ensure that the employer is valid. If staff are unable to speak directly with the employer and have not been able to verify validity through independent sources (e.g., BETO), the employer must not be verified/approved until corroborating information is found. The 2-business days' approval rule may be extended only for purposes of a thorough verification process.

Effective with CWDS Functional Release 3.2 (July 2010), employers are able to create a new *Company Profile* (formerly *Business Folder*), log into the *Profile*, and create job postings (formerly job orders) prior to staff approval of the *Company Profile*. Therefore, when verifying a newly-created *Company Profile*, staff must check for new job postings to be reviewed also. If there are new postings, staff should follow the Job Posting Guidelines (below).

The employer verification policy applies to **all** PA CareerLink® staff using employer-related modules in CWDS. Partners who have signed a data-sharing agreement have agreed to abide by **all** established policies and procedures.

EMPLOYER MERGE REQUESTS

There may be an occasion where there are duplicate Business Profiles for Employers in the CWDS system. Below is the procedure that staff must follow to request a merge of Employer Profiles.

Research the Situation First

- Contact the employer to verify the FEIN, locations, POCs, etc
- Multiple locations (Business Folders) under the same FEIN are permissible
- Cannot delete a business folder with any Job Postings -it must be combined with another folder
- **CAN** move Job Postings across FEINs
- **CANNOT** move POC with Keystone ID from one FEIN to another FEIN

Point of Contact Keystone IDs are attached to the FEIN and therefore a Pocs Keystone ID cannot be moved to an Employer Profile under a different FEIN. Staff must first remove POCs with Keystone IDs from Job Posting in "Open" status. In order for Central Office staff to better identify the duplicate folder, field staff should Inactivate and/or Reject folders in question.

Provide Instructions

- Provide Central Office staff with any special instructions

-Combine FEIN 123456789 with FEIN 987654321
-Delete Rejected folder FEIN 123456789 with Zip Code 17011

If there is a duplicate Business profile that was entered by Work-Opportunity Tax Credit or Rapid Response for WARN employers, there is a possibility they cannot be merged and they will have to stay separate. Once you identify the Business Profiles you want to merge submit request to the LX resource account. RA-LI-BWDP-LXStaff@pa.gov.

JOB POSTING PROCESSES

JOB POSTING GUIDELINES

To use the PA CareerLink® and CWDS to the fullest potential and to protect jobseeker customers from exploitation, PA CareerLink® staff must review all new, employer-entered job postings (staff-assisted and unassisted) on a daily basis. The following **must** be followed when verifying or accepting job postings:

- Under the Pennsylvania Human Relations Act, employers are prohibited from discriminating against or showing a preference for a person based on race, color, religious creed, ancestry, age, sex, or national origin. Job postings that state or imply such a preference or discrimination against are illegal. Discrimination based on race, color, religious creed, ancestry, age, sex, or national origin is valid as a Bona Fide Occupational Qualification (BFOQ) only when necessary to the essence of the normal operations of a particular business or enterprise. BFOQ cases are extremely rare. Permission and documentation from the Pennsylvania Human Relations Commission (PHRC) are required before any job postings containing such language can be accepted in CWDS.
- Job postings that ask the jobseeker to make a monetary investment (e.g., to purchase a sales kit or pay for training) **cannot** be accepted.
- Job postings that contain employer contact information in the *Job Summary* (name, phone number, address, URL website address) **cannot** be accepted.
- Job postings that appear to be for a "pyramid"-type sales opening – the person recruiting new salespersons receives a percentage of the new employee's commissions – **cannot** be accepted.
- Job postings using Form 1099 to report wages or where the employer asks the jobseeker to be "self-employed" or a subcontractor **cannot** be accepted. If a job posting seems that it may be classified as self-employment, PA CareerLink® staff must verify that the employer is paying all required federal and state taxes for the employee before accepting the job posting.
- Job postings for positions that are involved in a labor dispute **cannot** be accepted.
- Job postings for "work-at-home"-type positions – if they fall into the pyramid or self-employed categories – **cannot** be accepted.
- Job postings written in a language other than English within the main *Job Summary* section **cannot** be accepted. However, CWDS does provide the ability to write the *Job Summary* in a language other than English in the *Job Summary (Other than English)* section. Job postings must be written in English for PA CareerLink® staff to determine if the job posting meets EEO guidelines and does not contain any offensive language. Job postings with a *Job Summary (Other than English)* completed must be reviewed by PA CareerLink® staff who are able to read and speak that language, confirming that the *Job Summary* meets EEO guidelines and does not contain offensive language. A notation must be placed in the *Staff Summary Notes* section indicating the staff person who reviewed the *Job Summary (Other than English)* prior to approval of the job posting.

- Excessive, duplicated job postings or job postings that contain excessive referrals that employers may use to build their own databases or application files **cannot** be accepted.
- Job postings that use HTML to create the description **cannot** be accepted.

There is a long-standing agreement with the U.S. Armed Services to allow military recruiters to access and post job postings in CWDS. The terms of this agreement require recruiters to openly display their names and to disclose the pre-condition of military enlistment for obtaining the job listing. The job title, description, and keywords must also be specific and related to the specific position being advertised.

Employers have a duty to exercise due diligence when hiring employees. Therefore, they may indicate on a job posting that a criminal background check may be performed, and they may ask about criminal history on the application. However, employers are not permitted to state that answers to these questions are a pre-condition to obtaining employment. It is illegal for employers to consider, based in whole or in part, "criminal history record information" as defined at 18 Pa.C.S.Section 9102 to the extent that the information is not related to the applicant's suitability for the job in question (18 Pa.C.S. 9125). If an employer decides not to hire an applicant based in whole or in part on the criminal history record information, the employer must notify the applicant in writing (18 Pa.C.S. 9125(c)). Because PA CareerLink® staff are obligated to provide services for the universal population, all applicants should be referred, moving responsibility to refuse hiring based on an applicant's criminal history to the employer.

The number of *Requested Referrals* defaults at 100. If changing this number, PA CareerLink® staff must use their best judgment to reflect a realistic number of requested referrals based on the "popularity" of the job order and the ability of staff or the employer to adequately maintain the *Job Referral List*.

All job postings received by PA CareerLink® staff directly from an employer are to be entered into CWDS within 1 business day. This allows all PA CareerLink® staff and jobseekers access to job openings.

Prior to entering a job posting into CWDS, staff are to check the employer's *Company Profile* to determine that there is not a job posting currently open for the same position. This also allows staff to determine if there are similar, closed job postings that may be used to copy a new job posting.

When entering a job posting, staff cannot use the term "Confidential Employer" or the name of the PA CareerLink® in the employer name field. Performance measures for employer customer satisfaction require an employer name. If an employer wishes to remain confidential, check the "Keep Confidential" field and note in the *Job Posting Contact Details* section and note in the *Staff Summary* the employer's wishes. The words "Confidential Employer" may also be noted in the *Job Summary* section.

The *Job Posting Summary* should be used to provide details about the duties, conditions, and requirements of the job. It may also be used to provide special instructions, such as those needed with agricultural job postings. Employer contact information cannot be included in the *Job Summary*; this would allow a jobseeker to contact the employer without enrolling in CWDS. If an employer enters company information in the *Job Summary*, PA CareerLink® staff should contact the employer and explain the reason that the information must be removed.

To preserve integrity with employer customers, the "Status" of staff-assisted job postings should be maintained only by staff in the PA CareerLink® office that entered the job postings in CWDS.

Staff cannot change the details of a job posting (staff-assisted or unassisted) without first consulting the employer. If the employer has entered a job posting that does not comply with job posting guidelines, staff must contact the employer and ask that the job posting be modified. If the employer cannot or will not agree to the change, staff must inform the employer that the job posting will not be approved, will be placed in "Hold" Status until the changes are made, or will be closed.

Job postings identified by staff or the employer as staff-assisted are to be entered and/or maintained by PA CareerLink® staff. The staff person responsible for the job posting should be designated as the *Assigned Staff* for that job order. The *Instructions for PA CareerLink® Staff* area of a job posting should contain the name and/or office number of the PA CareerLink® handling the job posting as well as a staff contact and phone number. Any additional information important to staff can also be entered in *Staff Summary Notes*. This section of the job posting does not display to jobseekers.

Job postings identified as staff-assisted require matching, referral screening, follow-up, referral results entry, and require PA CareerLink® staff action to close the job posting based on the employer's request and established job posting procedures.

Job postings entered as self-service (unassisted) but later changed to staff-assisted are to be maintained by PA CareerLink® staff from the time that staff assistance is requested.

Job posting referral results should be entered within 30 days of the referral date.

The job posting guidelines apply to **all** PA CareerLink® staff using the *Employer Registration*, *Job Postings*, and *Participant* modules in CWDS. Partners who have signed a data-sharing agreement have agreed to abide by **all** established policies and procedures.

JOB POSTING SEARCH

All job posting list searches are accessed from the Staff site by clicking on the *Search* menu item, then *Employer*, and then *Job Posting*. All lists are arranged by ascending *Job Posting Number* by default. Staff can bring the most recent job postings to the top of the list by clicking the *Job Posting Number* column heading to re-sort the list by descending *Job Posting Number*. Job postings can be searched based on the selection in the *Job Posting Status* drop-down list on the *Job Posting Search* screen:

- New – A job posting that is newly submitted by an employer and requires staff approval prior to being displayed to the public.
- Open – An active job posting that is already approved and is accessible to the public.
- Hold – A job posting manually placed into a "Hold" status by staff or an employer for any reason after being approved. Job postings in "Hold" status are not accessible to the public. Job postings placed in "Hold" status by staff cannot be returned to any other status by the employer. However, the employer can edit job posting details while it is in "Hold" status. This function should be used by staff when requesting an employer edit a job posting that does not comply with the Job Posting Guidelines. Staff should return the job posting to "Open" status after the corrections have been made.
- Fully Referred – When the total number of actual referrals on the job posting matches the number of referrals requested for the job posting, the status changes from "Open" to "Fully Referred". Job postings in this status are not accessible to the public.

- Closed – A job posting in "Closed" status cannot be re-opened; it can only be copied. In addition, employers are not able to obtain contact details from a resume on a closed job posting.
- Incomplete – If an employer or staff stops the process of creating a job posting before submitting it for approval, it will be saved in "Incomplete" status.

NEW JOB POSTING LIST

New, unapproved job postings, both staff-assisted and unassisted, are to be reviewed on a daily basis. Postings are reviewed to ensure that they contain completed and clear information – supporting timely service to employer customers and promoting the protection of jobseeker customers from fraud. Direct contact with the employer, when staff assistance has been requested, provides confirmation to the employer that the job posting has been received and service is being provided. It also ensures the integrity of system data. Staff must also check that job postings do not contain discriminatory language, as described in Equal Employment Opportunity (EEO) guidelines.

If there is a problem or question concerning the job posting, PA CareerLink® staff must contact the employer. If it is a question of discriminatory language, the employer should be requested to change the wording. If the job itself is questionable, it should be discussed with the employer, and, if it cannot be resolved, the order should be "Rejected". PA CareerLink® staff may contact Labor Exchange Coordination Services for guidance regarding discriminatory, offensive, or invalid job postings. PA CareerLink® staff should never edit or change job posting details without first obtaining employer approval to do so.

If the PA CareerLink® office covers more than one county, staff must view the *New Job Posting List* for each county.

OPEN JOB POSTING LIST

From the perspective of PA CareerLink® staff, "Open" job postings are those where the number of actual referrals is less than the number of requested referrals. The *Open Job Posting List* is to be reviewed daily for possible activity needs. All staff-assisted job postings are required to have a *Participant Run Match* performed on the job posting. Regular contact with the employer is necessary to see if there is a continued need for the opening; if there is a need for more referrals; and/or if results need to be entered for existing referrals. When a limited number of jobseekers has matched or shown interest in the opening, staff should provide suggestions to the employer about changing the match elements to increase the number of matching jobseekers.

Job postings will not remain "Open" in CWDS for more than 6 months. If the employer is still actively recruiting, the job posting should be closed and copied to create a new job posting because:

- Many jobseekers ignore older job postings and only view those with recent dates.
- The *Browse Job Posting* list is arranged by chronological date, with the most recent date listed first. Those at the top of the list tend to get the most attention from both jobseekers and staff.
- Updated job postings contribute to a better-maintained system with the most recent information on all job postings for staff and customers, as well as up-to-date results.

However, job postings should never be closed and copied solely for the purpose of getting the job posting "to the top of the list."

CWDS will automatically close a job posting based on the following "Life Cycles":

- Staff-Assisted - The closing date for staff-assisted job postings is 180 days from the date of job posting approval.

- Unassisted - The closing date for unassisted job postings is 60 days from the date of job posting approval.

HOLD JOB POSTING LIST

The *Hold Job Posting* list will display job postings that have been manually placed into a "Hold" status by staff or an employer for any reason after being approved. Staff or employers can place a job posting in "Hold" status when the employer wishes to stop receiving referrals. Staff can place a job posting in "Hold" status when requesting an employer edit a job posting that does not comply with the Job Posting Guidelines. Job postings placed in "Hold" Status by staff cannot be returned to any other status by the employer. When placing a job posting in "Hold" status, staff should always include a note in the *Staff Instructions* section explaining why the job posting was placed on "Hold".

Job postings in "Hold" status are not accessible to the public, and, therefore, the *Hold Job Posting* list should be checked daily to determine if the job postings should remain in "Hold" status or be returned to "Open" status.

FULLY-REFERRED JOB POSTING LIST

Job postings are automatically placed in "Fully Referred" status when the actual number of referrals is equal to the number of referrals requested

Job postings in "Fully Referred" status are not accessible to the public, and, therefore, the *Fully Referred Job Posting* list should be checked daily to determine if the job postings should remain in "Fully Referred" status or be returned to "Open" status.

PA CareerLink® staff should contact the employer for all self-assisted job postings to inform the employer of the "Fully Referred" status and determine if s/he requires additional referrals. If the employer requests additional referrals, edit the job posting and increase the number of referrals requested.

CLOSED JOB POSTING LIST

The *Closed Job Opening* list shows <u>all</u> job postings that are in "Closed" status for the search criteria selected. A "Closed" job posting in CWDS cannot be reopened; it can only be copied. If a job posting has closed, and subsequently it is learned that a jobseeker who was on the original job posting referral list was hired, an *In/Out Job Posting* should be written to take the placement credit. Copy the "Closed" job posting and reference the original job posting number in the summary. It is the responsibility of PA CareerLink® staff to ensure that job postings are properly closed in CWDS. Both PA CareerLink® staff

and employers can close job postings; however employers are not able to obtain contact details from a resume on a closed job posting.

NO ACTIVITY SINCE JOB POSTING LIST

The *No Activity Since* search displays all job postings that have had no referral activity or jobseeker search activity from the date entered in the *No Activity Since* search field. In order to provide ample time to make any edits and/or perform *Participant Matches*, it is recommended that the date entered be 30 days prior to the current date. This list is to be reviewed at least weekly, and each job posting's employer should be contacted to determine if the position is still available. If the position has been filled or is no longer needed, PA CareerLink® staff should update the status of each referral and close the job posting. If the employer still wants referrals, update the present status of referrals and perform a job posting *Participant Match* search. If the job posting is in "Fully Referred" status, update the number of referrals to keep the job posting "Open".

AGRICULTURAL JOB POSTINGS

All agricultural job postings must be entered in CWDS as well as all transactions and registrations/enrollments related to the Agricultural Services program to ensure proper tracking to support program reporting requirements.

When a local agricultural job posting is received from BWDP Central Office and entered in CWDS, the following information should be included in the *Staff Summary*: "All referrals, generic applications, or copies of the jobseekers' CWDS resumes should be sent to the posting-holding office for forwarding to the employer or the employer's Point of Contact (POC)." In the *Job Posting Summary*, include the date of need as it is listed in Block 9 on the ETA-790 form.

The PA CareerLink® representative must keep a copy of all materials sent to the employer or the employer's point of contact (POC). When the job posting is closed, copies of the resumes/applications and activity reports of the job posting are to be forwarded to the State Coordinator. If there is a Migrant Farm & Seasonal Worker Advocate in the vicinity of the local PA CareerLink®, a copy of the job posting and the contract requirements for the job are to be provided to the Advocate. All PA CareerLink® staff will be informed by BWDP staff in Harrisburg of the posting and the procedures to be followed.

DELAYED PLACEMENT

Follow-up contact with employers to verify referral results on job postings is essential. Every effort should be made to update the status of each referral within a reasonable time-frame. If a job posting is "Closed", and it is subsequently learned – preferably through the employer – that the jobseeker was hired, an *In/Out Job Posting* should be written to take the placement credit. The original job posting number should be referenced in the *Job Summary*. If the job posting is still open, the status of the referral should be updated to "Hired" with a start date to record the placement.

EMPLOYMENT SERVICES PLACEMENT

A public or private employer who uses the PA CareerLink® system (CWDS), PA CareerLink® staff, or out-stationed PA CareerLink® staff/partners as a mechanism for hiring purposes, and subsequently hires

someone, is understood to have met the definition of a valid placement when the following conditions have been met:

- Employer entered a staff-assisted job posting through PA CareerLink® staff or self-entered a staff-assisted job posting through CWDS prior to referral – except in the case of a job development contact on behalf of a specific jobseeker.
- Employer requested referrals by selecting "staff-assisted" on the job posting or requests staff assistance in contacting jobseekers that have matched on the job posting.
- The individual(s) referred through the PA CareerLink® were staff-referred and were not specifically designated by the employer – except for referrals to agricultural job postings for a specific crew leader or worker. NOTE: self-referred jobseekers do not meet this requirement.
- Staff verified – from a reliable source, preferably the employer – that the individual(s) entered work.
- Placement was recorded in CWDS.

In the case of job development on behalf of a specific jobseeker, the agreement of the employer to interview the jobseeker may occur prior to the entry of the job posting into CWDS. In certain situations, staff assistance for referral of a jobseeker on an "unassisted" job posting will be counted toward placement activity.

The above definition applies to federal-funded Wagner-Peyser placements and Veterans-funded placements. The definition also applies to applicants placed by Veterans' staff. In some cases, staff-facilitated and self-assisted placement activity may count toward Labor Exchange performance measures. CWDS tracks this activity; therefore, staff must record all results of jobseeker/employer services.

FOREIGN LABOR CERTIFICATION (FLC)

Currently, all non-agricultural Foreign Labor Temporary and Permanent Certification applications are handled by the National Processing Centers in Chicago and Atlanta. For information, employers can be directed to the L&I website: http://www.dli.state.pa.us/portal/server.pt/community/l_i_home/5278 . They can click on "Employers", then "Finding Skilled Workers", then "PA Foreign Labor Certification Program".

IN/OUT JOB POSTING

The purpose of an *In/Out Job Posting* is to document specific referrals and results on a job posting when the steps of the placement definition occur quickly; when another type of service occurs; or when an agreement is in place for recruitment, and, therefore, a detailed job posting summary is not needed. The reasons when an *In/Out* posting are deemed sufficient are:

- Civil Service Placement – used to document a Civil Service placement when the referral and hire are taken after the fact. The jobseeker was given information on the job as a service, and, upon being notified of a placement by the jobseeker and/or Civil Service Commission, the *In/Out* posting is written. Required data in the *Job Order Summary*: "In/Out Posting – CS Announcement #". The office must have corroborating records that Civil Service information was provided to the jobseeker.
- Job Development – used to document a placement resulting from a job development. The jobseeker was given information about the opening at the time of the job development. A

referral is documented at the time the job development results in a placement, and an *In/Out* posting is written. Required data for the *Job Order Summary*: "In/Out Posting – No Summary". On the comment line of the service entry for the job development, reference should be made to the job posting number.

- Change-of-Results Placement on a Closed Posting – used when it is learned that the results of a referral on a closed posting, previously recorded otherwise, is actually a hire. As this posting is exactly like the original posting, required data in the *Job Order Summary* is: "In/Out Order – No Summary; see Order #", referencing the original posting. The referral entry on *Jobseeker Services* should also reference the original job posting number.
- Job Posting with Immediate Need – Occasionally, an employer will call with an opening that needs to be filled so urgently that there is no time to recruit in the usual way of taking the information; writing a posting; putting it into CWDS; referring on it; and getting results back from the employer. Many times, this will be to fill an immediate opening of a temporary duration with few, if any, requirements. After referrals are made, the posting is written to document referrals and results. Required data in the *Job Order Summary*: "In/Out Order – No Summary".

JOB POSTING REFERRAL

Staff-Assisted Referral:

- Referral of a previously-registered PA CareerLink® jobseeker to a job posting when the employer has requested staff assistance.
- Referral of a self-service jobseeker when the employer requests additional, specific screening which includes testing, special data collection – such as an employer application or specific assessment.
- A staff-assisted referral alone does not create or extend a Labor Exchange Program Participation for the jobseeker.

Facilitated Service Referral:

- Referral of a self-service jobseeker, not already marked as a registered jobseeker, based on a request by an employer to contact the jobseeker.
- Referral of a self-service jobseeker, not already marked as a registered jobseeker, based on a match conducted by the jobseeker to a job posting when an employer requests staff assistance but not additional specific screening.
- The facilitated referral does not create an ES registration for the jobseeker.

Self-Service Referral:

- Referral between a self-service job posting and a self-service jobseeker. No staff action is required.

O*NET™/NAICS

Employment Services federal reporting requires that jobseeker and job posting records include the Occupational Network (O*NET™) codes and that employer records includes the North American Industrial Classification System (NAICS) codes.

O*NET™ codes for jobseeker and job postings are derived from the occupation selections made on the job posting *Occupations List* and for jobseekers from the *Occupation Preferences*. Therefore, it is important that these selections are accurate.

PA CareerLink® staff performing Labor Exchange employer verification and approval services must enter NAICS Code classification in the employer *Company Profile* during the approval process. There is no electronic transfer of the selected codes. Staff must enter them manually into CWDS. To assist staff with these codes, the *Company Profile Details* screen displays a NAICS search button that links to the following URL for NAICS: http://www.census.gov/eos/www/naics/ .

SALARY/WAGE ENTRY INFORMATION ON JOB POSTINGS

When an employer wants to place a job posting on CWDS but does not wish to give an hourly wage, the PA CareerLink® staff should accept the job posting (provided the wage is at least minimum wage) and inform the employer that the job posting will be entered under "Competitive Salary". Minimum salary is a required field. Therefore, staff should make every attempt to obtain a realistic wage from the employer and emphasize any combination of the following reasons for doing so:

- By displaying a realistic wage, the employer may attract more, qualified jobseekers.
- CWDS is designed to not accept a job posting as "Competitive Salary" unless a minimum salary is completed first. However, this wage will not be displayed to jobseekers because staff have the option to select "No" to answer the question *Display Salary to Individuals?* This results in "Competitive Salary" being displayed to the jobseeker. The wage will not appear to jobseekers but will be used for statistical federal reporting requirements.
- When the employer chooses the "Competitive Salary" display, the wage figure entered is used for matching purposes. It allows CWDS to obtain more reliable jobseeker information if it reflects the realities of the job. By entering an unrealistic wage, potentially qualified jobseekers will not match on the job posting.

If the employer continues to refuse to provide an hourly wage, the staff should enter the average local prevailing hourly wage for that occupation (available on the CWIA website – http://www.paworkstats.state.pa.us) and select "No" to the question *Display Salary to Individuals?* ("Competitive Salary" will be displayed.) A note should be added to the *Staff Summary* indicating that the employer refused to provide an accurate wage and the wage entered is an estimate.

Under these circumstances, **always** include qualifying statements in the *Job Posting Summary*, such as "wages negotiable depending on experience". If staff discover that an employer has entered a job posting with an unrealistic wage, a contact to the employer to provide the above information may encourage the employer to edit the job posting. Under **no** circumstances should a job posting be approved with an obviously unrealistic wage.

JOBSEEKER PROCESSES

JOB POSTING NEEDING PARTICIPANT MATCH SEARCH LIST

The *Job Posting Needing Participant Match Search* lists all staff-assisted job postings that need a jobseeker match performed. This search list is to be reviewed daily. When the *Job Posting Needing*

Participant Match option is selected, CWDS will find job postings where the status is "Open", the level of service is 'Staff-Assisted", and the job posting has not had a successful staff applicant match since it was created. A successful match is any match that returns matching participant results.

A successful match is indicated when a *Run Match* is conducted and jobseekers match on the record. Staff must then view the jobseekers' resumes and take the appropriate action using the buttons on the bottom of the resume ("Refer", "Add to Call-In List", "Send Call-In Letter/Email", "Phone Message Left", or "Not Selected"). A job posting on this list may already have referrals made on the job posting if the jobseeker did a self-referral or was directly referred by staff. Job postings fall off this list after a successful match occurs. A job posting appears on this list for one of two reasons:

- The employer or staff have not yet performed a *Run Match* on the job posting.
- A *Run Match* was performed but did not have a successful participant match. Job postings remain on the list until a successful match takes place (one or more participants are returned).

PARTICIPANTS NEEDING CONTACT SEARCH LIST

The *Participants Needing Contact Search List* contains job postings with jobseekers that need to be contacted. There are several reasons that jobseekers appear on this list:

- A jobseeker has chosen to remain confidential and has been referred to the job posting by an employer conducted *Run Match*.
- An employer conducted a *Run Match* and has selected "Ask Staff to Contact" when reviewing the jobseeker's resume.
- Staff conducted a *Run Match* and have selected "Add to Call-In List" when reviewing the jobseeker's resume.

The list is to be reviewed daily. If the PA CareerLink® office covers more than one county, the procedure must be followed separately for each county. PA CareerLink® staff are responsible for selecting each job posting on his/her list and contacting jobseekers for referral purposes. Each jobseeker is to be contacted by phone, email, or by sending a call-in card. The "Status" for each jobseeker should be updated on the *Job Posting Referral* list. When the status has been changed for each jobseeker to be contacted, click on the "Update Referrals" button to record the status change.

PROGRAM REFERRALS

Program referrals direct jobseekers to various sources for assistance or information about specific programs. Staff can refer jobseekers to the programs provided by the Commonwealth of Pennsylvania, such as Education and Training Assistance, Labor Exchange Program, Veteran's Program, Office of Vocational Rehabilitation-Bureau of Vocational Rehabilitation Services Trade Program, and Office of Vocational Rehabilitation-Bureau of Blindness and Visual Services. Jobseekers are able to self-refer to programs during the enrollment process or from the *Resources* menu while logged in to their enrollment. Staff can search for *Program Referrals* for their office by selecting the *Search* menu > *Participant*. Select *Program Referral*, enter appropriate information on the *Search Program Referral* screen and click the "Search" button.

A search of new program referrals will be conducted daily and the jobseeker contacted for assistance. A referral can have any of the following statuses:

- New - A referral was created, but has not been acknowledged by staff yet.
- Received - Staff has viewed the referral and performed an action on it. The referral is then routed to the appropriate office based on the zip code.
- Inactive - The referral is rejected.

SOCIAL SECURITY NUMBER (SSN) CHANGES/CORRECTIONS

NEVER enter a jobseeker's full social security number into an email. Requests to edit a jobseeker's SSN, including adding a full SSN, must contain the following:

- Verify the correct SSN by viewing a SSN card, other official document, or Labor & Industry IMS System
- Labor Exchange Coordination Services staff in Harrisburg must have confirmation that the SSN was verified before a SSN can be changed.
- The request must include a statement that the SSN has been verified and indicate the source document used for verification.
- Provide instructions for resolution.
- Do not send the full SSN.
- Provide the CWDS Participant ID Number (PID).
- Provide only partial numbers to be changed:
    - "the first three numbers should be 258" or
    - "the last four numbers should be 6789"
    - Email the request to the Labor Exchange resource account ra-li-bwdp-lxstaff@pa.gov

If a jobseeker has been using another participant's SSN, requests to edit the SSN must contain the following:

- Verify the correct SSN by viewing a SSN card, other official document, or Labor & Industry IMS System.
- Labor Exchange Coordination Services staff in Harrisburg must have confirmation that the SSN was verified before a SSN can be changed.
- The request must include a statement that the SSN has been verified and indicate the source document used for verification.
- Provide instructions for resolution.
- Do not send the full SSN.
- Provide the CWDS Participant ID Numbers (PIDs) of the records in question.
- Indicate which PID each SSN belongs to.
- Email the request to the Labor Exchange resource account ra-li-bwdp-lxstaff@state.pa.us

LABOR EXCHANGE SERVICES

The following are the services and program eligibilities used in Labor Exchange. PA CareerLink® staff providing these Labor Exchange services are required to record all services/program eligibilities in CWDS for federal reporting requirement purposes. Additional comments by staff for all services are strongly recommended in the interest of providing a more complete picture of a jobseeker's progress. Some program eligibilities require staff comments, such as *Job Development*, *Mass Recruitment*, and all referrals under *Referred to Supportive Services*. Comments posted can be viewed by applicants.

ASSESSMENT SERVICES

- Employability Development Plan: a written document that identifies a planned series of actions leading to employment and specifies the employment, training, and social services to be provided.
- Interview: jobseekers who receive an initial analysis of the strengths and weaknesses of their educational level, work history, vocational skills, or identification of employment barriers and may include a discussion of a plan to use their strengths and reduce weaknesses.
- PREP Assessment: a written review of basic skills, occupation skills, prior work experience, employability, interests, and service needs of each participant. This service is for a jobseeker who has been enrolled as a PREP participant.
- PREP Orientation: the claimant/jobseeker, who has been selected for the PREP program, has attended an orientation conducted by PA CareerLink® staff to explain the program; provide an overview of the programs and services available at the PA CareerLink® office; and an introduction to the Career Resource Area.
- Trade BRI: a group or individual meeting with worker(s) to provide full information about the benefit allowances, training, and other employment services available to workers under the Trade Acts and the procedures and deadlines for applying for such benefits.
- ABLE, TABE 7-8, and TABE 9-10 testing
- Jobseeker Refused Assessment Testing

CALL-IN SERVICES

- Call-in for PREP: a PREP claimant called in for any reason other than a specific job posting.
- Call-in for Service: a jobseeker called in for any reason other than for a specific job posting.
- Did not Report for Call-In: a claimant/jobseeker has not responded to one of the listed call-in services.
- Reschedule for PREP: a claimant contacted staff after receiving a PREP Call-In letter but prior to the scheduled orientation to request a change in the date/time to report to the orientation.
- Second Call-in for PREP: a claimant received a second call-in for the PREP orientation, due to a "Did Not Report to Call-In" result for the first scheduled orientation.

CAREER GUIDANCE SERVICES

- Military Transition Assistance Program (TAP) Workshop: a workshop that provides service members with vocational guidance that allows these new veterans to make informed career choices.
- O*NET™ Ability Profiler: a jobseeker completed the O*NET™ Ability Profiler.
- O*NET™ Interest Profiler: a jobseeker completed either the hard-copy or computerized version of the Interest Profiler.
- O*NET™ Work Importance Profiler: a jobseeker completed either the hard-copy or computerized version of the Work Importance Profiler.
- Receive Career Guidance Services: services that involve providing a wide range of information, materials, suggestions, or advice which are intended to assist a jobseeker in making occupational or career decisions.

CASE MANAGEMENT SERVICES FOR VETERANS

- Assigned Manager and Received Services (Veteran): veteran jobseekers who were assigned a case manager and received services subsequent to that assignment (on the same day).
- Assigned to Case Manager (Veteran): veteran jobseekers to whom a staff member, such as LVER or DVOP, has been assigned to provide ongoing one-on-one personal assistance and regular follow-up, using a case management approach to services.
- Received Case Management Service (Veteran): veteran jobseekers who received services (counseling, referral to supportive services, job development contacts, referral to a job, referral to training, placement in a job, placement in training, vocational guidance, or any combination of those services) provided they are following the assignment of a case manager.
- VA Voc Rehab Assigned Case Manager (Veteran): veteran jobseekers who, through cooperation between PA CareerLink® staff and outreach staff associated with the Veteran Affairs Vocational Rehabilitation Program, have been assigned a case manager to provide ongoing one-on-one personal assistance and regular follow-up using a case management approach to services.
- VA Voc Rehab Assigned Case Manager/Received Service (Veteran): veteran jobseekers who, through cooperation between PA CareerLink® staff and outreach staff associated with the VA Vocational Rehabilitation Program, were assigned a case manager and received services subsequent to that assignment (on the same day) as described above.
- VA Voc Rehab Received Case Management Service (Veteran): veteran jobseekers who, through cooperation between PA CareerLink® staff and outreach staff associated with the VA Vocational Rehabilitation Program, received services (counseling, referral to supportive services, job development contacts, referral to a job, referral to training, placement in a job, placement in training, vocational guidance, or any combination of those services) provided they are following the assignment of a case manager.
- Case Management (Non-Veteran)

EDUCATION AND TRAINING SERVICES

- Jobseeker Refused Training
- Remedial Education
- High School Equivalency Diploma (GED)
- Post-Exit Other
- English as a Second Language
- Computer Literacy

EMPLOYMENT BARRIER SERVICES

- Offender

ES CONTACT SERVICES

- Local Office Contact: entered by PA CareerLink® staff on a jobseeker's record to indicate that the jobseeker had contact with the PA CareerLink® office.

FOLLOW-UP SERVICES

- Follow-Up: a jobseeker is contacted by any method (e.g., phone call, email, or letter) to determine if additional services are needed and/or to obtain subsequent employment information. This may also include customer satisfaction surveys if information is collected regarding additional services and subsequent employment.

JOB DEVELOPMENT SERVICES

- Job Development Contact: the process of soliciting and/or securing a job interview with a public or private employer for a specific jobseeker for whom the PA CareerLink® has no suitable openings in CWDS. The staff person facilitates the interaction between the employer and the jobseeker. Additional comments required, indicating the employer's name and the results of an interview (or contact if no interview).

JOB SEARCH ACTIVITY SERVICES

- Rapid Response: an individual attends a meeting or is provided information to enable him/her to transition to new employment as quickly as possible, following either a permanent closure or mass layoff or a natural or other disaster resulting in a mass job dislocation. This is only a service for previously-enrolled/registered jobseekers in CWDS.
- Group Orientation: a group of selected jobseekers is assisted in locating, obtaining, interpreting, and using occupational, educational, training, social, and personal information needed for vocational exploration, decision-making, and planning.
- Job-Finding Club: encompasses all elements of the Job Search Workshop, plus a period (1-2 weeks) of structured, supervised application where participants learn how to search for jobs. The Job Search Workshop can be provided in a separate service.
- JO File Search with LO Contact: PA CareerLink® job postings (JO) are searched on behalf of a jobseeker who has visited or called the local office (LO) for possible jobs that match his/her availability/interest criteria for referral. This entry can be used when no other service or job posting activity is available.
- JO File Search without LO Contact: PA CareerLink® job postings are searched on behalf of a jobseeker for possible jobs that match his/her availability/interest criteria for referral. This search occurs without a PA CareerLink® contact by the jobseeker.
- Resume Preparation Assistance: a jobseeker is provided instructions on the content and format of resumes and career cover letters and provided assistance in the development and production of same.
- Labor Market Information: a jobseeker is provided information concerning occupational staffing patterns, hiring patterns, working conditions, and pay of firms or industries based on his/her career needs during a face-to-face interview.
- Career Resource Area: a jobseeker has been referred to the Career Resource Area provided that an orientation has taken place and an introduction to services and materials. First visit only.
- Mass Recruitment: a jobseeker is applying for a specific employer and is not interested in any other service or employer.

- Job Fair: a jobseeker is provided information concerning available services and/or employment opportunities and given handouts on job search, interviewing techniques, resume-writing, training opportunities, and program. Resumes are accepted.
- Job Search Planning: the development of a plan for a jobseeker (not necessarily a written plan) that includes the necessary steps and timetables to achieve employment in a specific occupation, industry, or geographic area. This entry can be used for the PREP program.
- Job Search Workshop: a short seminar designed to provide participants with knowledge that will enable them to find jobs. Subjects are not limited to, but should include, labor market information, jobseeker/resume-writing, interviewing techniques, and finding job openings.
- Workshop Components: enter to indicate that a jobseeker participated in the specified component(s) of the job search workshop if the entire workshop was not completed. These components are not prerequisites to take an Obtained
  Employment Service; the complete workshop must be given to take an Obtained Employment.
    - Dealing with Reality of Job Loss
    - Establishing Job Goals
    - Identifying Skills
    - Interviewing Techniques
    - Starting My Own Business
    - Targeting Potential Employers
    - VA Vocational Rehabilitation

LABOR EXCHANGE PROGRAM ELIGIBILITY DETERMINATION SERVICES

- Homeless and Disadvantaged
- Year-Round Youth Eligible
- Work Opportunity Tax Credit (WOTC)
- ES Participation Program
- Homeless Veterans Reintegration Program
- Other Unemployment Compensation
- Extended Unemployment Compensation Benefits
- Eligible for Dislocated Worker Program
- Economically Disadvantaged
- Project Reconnect
- Disabled Veterans
- Not Disabled Veterans
- Special Disabled Veteran
- Older Worker
- Eligible for PA Conservation Corps
- Eligible for Summer Youth
- Employer Assistance and Retention Network
- Food Stamps Only
- Temporary Assistance for Needy Families (TANF)
- General Assistance
- State Unemployment Compensation
- Other Veteran with Campaign Badge or Armed Forces Service Medal
- Other Veteran with no Campaign Badge

- Eligible Person

OBTAINED EMPLOYMENT SERVICES

- When a New Directions Coordinator or jobseeker finds employment away from a job posting, it is considered to be an "Obtained Employment" (OE). An OE should be reported in CWDS under "Programs" under "Welfare Programs" as "Eligible for New Directions Program". This requires no prerequisite services. These services should be entered only when a jobseeker in the New Directions program has obtained employment.

PLACED IN TRAINING SERVICES

- WIA Institutional
- Job Corps
- Other Federal
- Other State or Local
- VA Vocational Rehabilitation

PREP EXEMPTIONS SERVICES

- Currently enrolled in approved training (WIA, TAA, and all other UC)
- Currently receiving or completed similar reemployment services
- Moved and now filing claims on an interstate basis
- Return to work after PREP program call-in or participation
- Other – must include a Comment
- Received a return-to-work date or working part-time prior to PREP call-in
- Inappropriately profiled

REFERRED TO SUPPORTIVE SERVICES

Additional comments are required for all Supportive Services referrals, indicating the specific agency/organization – including PA CareerLink® partner organizations – to which referral is made. Report credit is only given for one Supportive Service in a Program Year for a registered jobseeker under ES.

- WIA Institutional Training: WIA institutional training programs
- WIA – referral to WIA staff for any WIA services
- Ref Job Corps: referrals to Job Corps training programs
- Ref Other Federal: referrals to other federal training programs
- Ref Other State and Local: referrals to other state and local training programs
- Ref Educational: referrals to a program or course designed to develop competency in basic educational skills, such as reading, comprehension, mathematics, writing, speaking and reasoning, and/or programs leading to educational credentials, such as GED or high school diploma or college degree
- Affirmative Action: NAACP, Human Relations Commission, Equal Employment Opportunities Commission, Director of Civil Rights

- Aging: Green Thumb, Meals-on-Wheels, Home Care, Senior Citizen Centers, Experience Works, Area Agencies on Aging Centers
- Basic Services: food, fuel, utilities, housing, clothing, food pantries, soup kitchens, fuel assistance, homeless shelters, Goodwill Industries
- Child/Youth Services: childcare, Head Start
- Community Development Org: WIA, Economic Development, Planning Commission, Chamber of Commerce, small business services
- Drug and Alcohol Assistance
- Education/Training: high schools (GED), community colleges, trade schools, intermediate unit, career center
- Financial Assistance: financial assistance for education, PHEAA, workers' compensation, social security
- VA Vocational Rehabilitation: referrals to VA Voc Rehab training programs
- Health: mental health/mental retardation, state Health Department, Migrant Health, community health centers
- Department of Veterans Affairs
- WIA: OJT provided at employer location
- Labor organization: AFL-CIO, labor unions, apprenticeship and training
- Legal aid
- Literacy: adult literacy project
- Military Recruiter
- OVR: Office of Vocational Rehabilitation
- Supported Emp/Handicap: Goodwill Industries, sheltered workshops, Blindness and Visual Services
- Transportation: agencies that provide transportation for employment
- Unemployment Compensation: report only when referred for new or re-open claim activity
- United Way: YMCA/YWCA, Community Action, Red Cross
- Veterans Services: GVOAC, Military and Veterans Affairs
- Volunteer Organization: Volunteers in Partnership, any others
- Welfare
- Women's Support: homemaker groups, domestic violence, rape crisis
- PCC: Pennsylvania Conservation Corps
- Ref Other Federal – Trade

SOME REPORTABLE SERVICES

- ES and DVOP/LVER: to be used to report service to jobseekers prior to placement. Such services to veterans should be included in this item. This is used to report services to veterans and non-veterans that are not specifically accountable to other services. Additional comment required indicating specific service to which jobseeker is being referred.
- DVOP/LVER Follow-up (Vet only): to be used by DVOP/LVER staff only for recording follow-up contacts of jobseekers after placement in a job or placement in training.
- Vocational Guidance: vocational guidance services are those services provided by staff, including LVERs and DVOPs, that involve providing Veteran jobseekers a wide range of information, materials, suggestions, and advice which are intended to assist in a vocational decision by the jobseeker regarding employment and training opportunities.

- Bonding Assistance: to be used to report provision of bonding assistance
- Equal Opportunity Rights: to be used when the jobseeker has read and agrees/disagrees with the Civil Rights Statement. To be added by staff only when the Equal Opportunity Rights have been given to the jobseeker on a paper form. Additional comment required – to indicate where in the PA CareerLink® office the signed form is filed.
- Voc Rehab by Vet Affairs: to be used to count registered jobseekers that are veterans referred to the Department of Veteran Affairs for vocational rehabilitation services.
- Voc Rehab by Other: to be used to count all registered jobseekers who are referred to any vocational rehabilitation facility, such as the PA Office of Vocational Rehabilitation, hospitals, or any other private or public vocational rehabilitation entity.

TERMINATION FROM TRAINING SERVICES

- Termination from Training (Successful):
  - VA Voc Rehab – completed training
  - WIA Institutional
  - Job Corps
  - Other Federal
  - Other State or Local
- Termination from Training (Unsuccessful):
  - WIA Institutional
  - Job Corps
  - Other Federal
  - Other State or Local
  - VA Voc Rehab – did not complete training

TESTING SERVICES

- Other: examples are Civil Service tests and Employer tests
- Proficiency: examples are TABE, ABLE, typing, data entry
- WorkKeys

TRADE 2002/2009 WAIVERS SERVICES

- Recall
- Marketable Skills
- Retirement
- Health
- Enrollment Unavailable
- Training not Available
- Revoked

WORK TEST SERVICES

- Failed to Respond: the failure by a jobseeker to respond either verbally or in writing to the PA CareerLink® staff when s/he has been called in for services, i.e., for a job, for a training selection interview, or for other reasons.
- Negative Referral Result: negative responses by a jobseeker related to the job referral process, including refusal of job, failure to report for interview with employer, or failure to report for work.
- Refused Referral: the failure by a jobseeker to accept referral to a job offered by the PA CareerLink® staff.
- Failed to Report to PREP Service: the failure by a jobseeker to report for PREP Service or to contact the PA CareerLink® staff to reschedule PREP Service.
- Failed to Report for Claimant Call-In Service:
- Failed Action – New Directions: Grounds for closure from the New Directions program include, but are not limited to, a refusal to accept a job referral from PA CareerLink® staff; failure to report to a scheduled appointment; failure to report to a job interview; negative attitude toward the program; refusal of a job offer; use of offensive mannerisms in public; and the failure to respond to a call-in appointment.

LABOR EXCHANGE PROGRAMS

DISLOCATED WORKERS PROGRAM

A dislocated worker is an individual who:

- Has been terminated or laid off or who has received a notice of termination or lay-off from employment; is eligible for or has exhausted his/her entitlement to unemployment compensation; and is unlikely to return to his/her previous industry or occupation OR
- Has been terminated or who has received a notice of termination of employment, as a result of any permanent closure of a plant or facility OR
- Is long-term unemployed and has limited opportunities for employment or reemployment in the same or a similar occupation in the area in which such individual resides, including any older individual who may have substantial barriers to employment by reason of age OR
- Was self-employed (including farmers and ranchers) and is unemployed as a result of general economic conditions in the community in which they reside or because of natural disasters, subject to regulations prescribed by the Secretary.

EMPLOYER TAX PROGRAM

- Work Opportunity Tax Credit (WOTC) federal program: employers may qualify for a tax credit that can be applied to federal taxes by hiring workers who meet one of the designated targeted groups' eligibilities.

EMPLOYMENT, RETENTION, AND ADVANCEMENT NETWORK PROGRAM (EARN)

The purpose of EARN is to address the needs of welfare and low-income individuals with serious barriers to gaining and maintaining employment by providing comprehensive case management, remediation, education with special emphasis on individuals with limited English proficiency, skills training, work

activities, job placement and retention activities, as well as providing supportive services, including payment for childcare.

MATURE WORKER PROGRAM

Qualified mature jobseekers, age 40 and over, are provided information to help them match their job skills, practical experience, and proven record of reliability with current job openings. A referral to other resources or services can be made for those individuals needing further assistance.

PENNSYLVANIA PROFILE RE-EMPLOYMENT PROGRAM (PREP)

PREP is designed to identify claimants who are most likely to exhaust UC benefits and who may need job assistance to expedite their re-employment. Selection to PREP takes place when an individual files a new application for UC and receives his/her first payment. UC claimant characteristics are compared using a UC profiling model to arrange the claimants on lists for call-in for PREP re-employment services. PREP participants are provided an Orientation to the program, assessment of their re-employment needs, including a career plan, job match and referral, use of the Career Resource Center, and Case Management.

TRADE ASSISTANCE PROGRAMS

- ATAA: Alternative Trade Adjustment Assistance is designed to allow TAA-eligible workers aged 50 and older, for whom retraining may not be appropriate and who find full-time reemployment, to receive a wage subsidy to help bridge the salary gap between their old and new employment. To receive ATAA benefits, the petition must be certified for both TAA and ATAA. This is only available on Trade Act 2002 certifications.
- RTAA: Reemployment Trade Adjustment Assistance is designed to allow TAA-eligible workers aged 50 and older, for whom retraining may not be appropriate and who find full-time reemployment, to receive a wage subsidy to bridge the salary gap between their old and new employment. All Trade Act of 2009 certifications include RTAA. This is only available on Trade Act of 2009 certifications.
- TRA: Trade Readjustment Allowances are income support payments, similar to UC, usually provided to a Trade Act participant while they are attending approved training, but these benefits may also be paid during a time period covered by a written training enrollment waiver.

VETERANS PROGRAM

Pennsylvania has been provided with funds to assist veterans in finding jobs. Veterans' employment representatives (DVOP and LVER) are placed at all PA CareerLink® offices or participating agencies to provide free job counseling, training referrals, and placement services to veterans. Eligible veterans are given priority in the referral to job openings and training opportunities. Special Disabled veterans are given the highest priority in referrals. DVOPs and LVERs also assist veterans by providing information about unemployment compensation, job fairs, and on-the-job and apprenticeship opportunities.

APPENDIX A – TRANSACTION CYCLES

Within 24 hours of receipt:

- Job postings entered in CWDS
- *New/Pending Job Postings* reviewed for approval
- Agricultural postings entered

Within 48 hours of receipt:

- Employer verification completed

Daily:

- Review *New/Pending Company Profiles* and contact employers for verification
- Review *New Job Posting List* for possible fraud or discrimination in the postings; contact employer for marketing purposes and if problems/questions with job postings
- Review all job posting lists for possible activity needs
- Search all CWDS supports requests and attempt to contact participants, employers, and providers requesting assistance
- Search all CWDS program referrals and attempt to contact participants requesting information on programs.
- Search all Employer Services Requested list and attempt to contact.
- Review *Participants Needing Contact Search List* for call-in/referral purposes
- Review *Job Posting Needing Participant Match Search List*; perform *Participant Run Matches* on all staff-assisted job postings
- Call in Trade Readjustment Act (TRA) claimants for job search and training services

Weekly:

- Review *No Activity Since* list for possible activity needs
- Schedule PREP Orientation sessions
- Schedule New Directions customers; discuss job search, training, and other available services

APPENDIX B – LABOR EXCHANGE SERVICE CATALOG AND PROGRAM ELIGIBILITIES

Worksheets attached/follow this document

APPENDIX C – EMPLOYER SERVICES CATALOG

Worksheet attached/follows this document

Appendix G – Priority of Service Policies

1. Local Priority of Service Policies

BWDP staff recommend the following language to ensure local Priority policies describe the conditions under which intensive and/or training services are limited and who shall be provided access to such services under those conditions:

Priority of Service Policy
Needs to address how it is determined that funds are limited, such as:

(Example)

Each year a new budget is prepared to reflect funds availability and planned usage. Funds usage is evaluated quarterly. Funds are determined to be limited when program costs during any budgetary quarter exceed 25% of the yearly budgeted amount for the funding stream.

In the event the allocated funds to the local area become limited, priority shall be given to eligible recipients, particularly veterans most in need of "intensive" and / or training services reviewed on a case-by-case basis. Core services available on a continual and universal basis. The following is a list of additional priorities for service as a matter of policy:

- Veteran and eligible veteran's spouse
- Basic Skills Deficient
- Single Parent
- Individual with Disability
- Limited English Language Proficiency
- Lacking Formal or Recent Work History (Two Years or More)
- Food Stamp Recipient (Only) GA
- Food Stamp Recipient (Only) ABAWD
- Institutionalized
- Part-time Worker
- Long-term Unemployed (15-weeks or More)
- UC Exhausted
- Minority
- Older Individual
- School Dropout
- Accelerated Rehabilitation Program or Disposition Program Participant (ARP/ARDP)

- And/or any other recognized "at-risk" characteristics, which may limit employability.

2. Veterans Priority of Service Policy Notification

PRIORITY OF SERVICE FOR COVERED PERSONS PERTAINING TO VETERANS AND ELIGIBLE SPOUSES

ELIGIBILITY

Covered person – The regulations adopt and apply this statutory term, which includes *Veteran and Eligible Spouses*, as defined by the statute at 38 U.S.C. 4215 (a) (1) (A) and (B).

- ***Veteran*** – Service in the active military, naval, or air service, and discharge under conditions other than dishonorable. **The term "active" means – full-time duty in the Armed Forces, including National Guard or Reserve components, for other than active duty for training.**

- ***Eligible Spouse*** – the spouse of any of the following individuals:

  - 1. Any veteran who died of a service-connected disability.
  - 2. Any member of the Armed Forces, including National Guard and reserve components, serving on activity duty who, at the time of application for assistance in one or more of the following categories and has been so listed for a total of more than 90 days.
    - a) missing in action,
    - b) captured in the line of duty by a hostile force, or
    - c) forcibly detained or interned in line of duty by a foreign government or power.
  - 3. Any veteran who has a total disability resulting from a service-connected disability, as evaluated by the Department of Veterans Affairs.
  - 4. Any veteran who died while a disability, as indicated in number three above, was in existence.

ENTITLEMENT

As provided for in the Jobs for Veterans Act (JVA), *covered persons* are entitled to priority over non-covered persons for the receipt of employment, training and placement services provided under new or existing qualified job training programs. Qualified job training programs are defined as any workforce preparation, development or delivery program or service that is directly funded, in whole or in part, by the US Department of Labor (USDOL). The PA CareerLink® will provide priority of service according to the policy established by USDOL,

Veterans' Employment and Training Service 20 CFR 1010 Priority of Service for Covered Persons.

As part of our *priority of service policy* we want to inform you of the services available to you through the PA CareerLink® and the eligibility requirements for each program. **Access to the specific services mentioned below will require you to identify yourself as a *Covered Person* in order to receive priority of service.**

WAGNER-PEYSER EMPLOYMENT SERVICE
Eligibility Requirement: *None*
Access to the Commonwealth Workforce Development System (CWDS) to review employment options. PA CareerLink® Staff assists in job search, placement assistance, and reviewing employment options. Access to resources in the Career Resource Center.

JOB FOR VETERANS STATE GRANT
Eligibility Requirement: Served on active duty for a period of more than 180 days and was discharged or released with other than a dishonorable discharge, or was discharged or released from active duty because of a service-connected disability. Also, this includes any person who as a member of a Reserve component unit under an order to active duty pursuant to section 672(a), 672(d), 672(g), or 673 of Title 10, served on active duty during a period of war or in a campaign or expedition for which a campaign badge is authorized and was discharged or released from such duty with other than a dishonorable discharge. It matters not whether they served in the theater, but merely that they served any time during a period of war.

WIA DISLOCATED WORKER SERVICES
Eligibility Requirement: Individuals must meet General Eligibility, which consists of Citizenship or Eligible to Work, at least 18 years of age, and Selective Service Registrant, if applicable. A dislocated worker is an individual who has been:

1. terminated/laid off, eligible for Unemployment Compensation (UC), and unlikely to return to previous occupation OR has been employed for a duration sufficient to demonstrate to the appropriate entity at a one-stop center, attachment to the workforce, but is not eligible for UC due to insufficient earnings or having performed services for an employer that was not covered under the state UC law and is unlikely to return to previous occupation;
2. permanent closure/substantial layoff;
3. general announcement of closure;
4. formerly self-employed/currently unemployed; or
5. displaced homemaker.

WIA ADULT SERVICES
***Eligibility Requirement*:** Individuals must meet general eligibility criteria, which consists of citizenship or eligible to work, at least 18 years of age, and selective service registrant, if applicable.

TRADE ADJUSTMENT ASSISTANCE (TAA) SERVICES
***Eligibility Requirement*:** Adversely affected workers who lose their jobs, whose hours of work and wages are reduced as a result of increased imports, or whose firms have been affected by or are threatened by shifts in production to certain foreign countries. The worker must have employment at a trade certified employer as determined by US Department of Labor (USDOL). It also provides assistance to workers whose firm is a supplier or downstream producer to a firm that received a Certification of Eligibility.

SENIOR COMMUNITY SERVICE EMPLOYMENT PROGRAM SERVICES (SCSEP)
***Eligibility Requirement*:** Individual age 55 and older and have a family income of no more than 25% over the Federal poverty level. It provides subsidized work experience and training a public and private non-profit agencies or organizations. Worksites are selected for this program based on their ability to provide meaningful community service work, proper supervision, and skill development opportunities.

WIA YOUTH SERVICES
***Eligibility Requirement*:** Individuals must meet General Eligibility Criteria, which consists of Citizenship or Eligible to Work, ages 14-21, and Selective Service Registrant, if applicable. Youth must also be Low Income and have at least one of the following barriers:

1. basic skills deficient;
2. school dropout;
3. homeless, runaway, or foster child;
4. pregnant or parenting;
5. offender;
6. is an individual (including a youth with a disability) who requires additional assistance to complete an educational program or secure and hold employment.

If **not** low income with a barrier, youth must have at least one of the following 5% Eligibility Exceptions:

1. school dropout;
2. basic skills deficient;
3. behind grade level;
4. pregnant or parenting;
5. individual with disabilities, including learning disabilities;

6. homeless or runaway;
7. offender;
8. serious barriers to employment as identified by the local board and described in the local plan.

NOTE: Not more than 5% of youth participants served in the local area may be individuals who are not low income with a barrier.

NATIONAL EMERGENCY GRANTS (NEG)
Eligibility Requirement: For any NEG received by the commonwealth for any employment and training program that serves over 1,000 covered persons per year nationally. The Covered Person would have to meet the qualifications of the targeted group for which the NEG was received.

3. Priority of Service for Veterans

Services and processes that ensure priority of service – Policies and processes are in compliance with veterans' priority of service provisions in accordance with the Jobs for Veterans Act (P.L. 107.288) and 20 C.F.R. 1010, and relevant federal guidelines. Guidance has been provided to all PA CareerLink® staff regarding covered veterans and their eligible spouses receiving priority of service in all employment and training programs funded in whole or part by the United States Department of Labor (USDOL). Priority of service to veterans and eligible spouses is the responsibility of all PA CareerLink® staff, and not limited to the LVER and DVOP staff. Pennsylvania monitors the compliance and effectiveness of the priority of service being provided at the local level through a range of methods, including but not limited to, PA CareerLink® reports; Manager's Reports on Services to Veterans; monitoring visits to the one-stops; and monitoring LWIB's to ensure that their own monitoring of lower level entities is in compliance.

Awareness of priority of service entitlement – Covered persons are made aware of their priority of service entitlement through the PA CareerLink® staff, including the DVOPs and LVERs. Prominent posting, as well as informative handouts offered by staff upon individuals' entry into the Pennsylvania one-stop locations, ensures that all clients are made aware of their possible eligibility as a Covered Veterans, and that they are requested to self-identify.

The Commonwealth Workforce Development System (CWDS) has been modified to identify and capture relevant data, and to notify covered veterans and eligible spouses of their possible eligibility at the point of entry into the workforce reporting system, in accordance with 20 C.F.R. 1010.

Staff Responsibilities – All partner agency staff in PA CareerLink® offices, are made aware of their responsibilities to provide priority of service to veterans and eligible spouses through directives and memoranda, as well as through training provided by Local Veterans Employment

Representatives (LVERs). LVERs train PA CareerLink® partners, and coordinate with other workforce development providers, to promote and facilitate the provision of labor exchange services as a priority to Covered persons.

Veterans and Covered persons have priority referral to services designed to assist them to achieve physical, mental, social, and/or economic well-being; and to reduce or eliminate barriers to employment. Supportive services include, but are not limited to: health and medical services, transportation, welfare, financial planning, Veterans' services, educational assistance, and counseling.

PA CareerLink® offices develop and maintain a current directory of community service agencies and types of supportive services available to veterans and eligible spouses under the Jobs for Veterans Act. This directory is available for staff use as a ready reference source.

Job Referrals – Qualified veterans and Covered persons are identified and referred to jobs before qualified non-veterans. When a job match from an employer job order is made through PA CareerLink®, identified eligible veterans and Covered persons' names appear first on the list of potential job seekers. Veterans Program staff promotes an understanding of veterans' priority of referral with all PA CareerLink® partners. The priority of service for job referrals is as follows:

- Special Disabled Veterans
- Disabled Veterans
- Newly Separated Veterans
- Recently Separated Veterans
- Other Veterans with Campaign Badge or Armed Forces Service Medal
- Other Veteran with no Campaign Badge
- Eligible Persons
- Covered Veterans
- Eligible Spouses
- Non-Veterans

Applicants being considered for USDOL programs with existing targeting provisions are assessed for existing provisions of the program and eligibility for veteran priority of service. For programs that contain mandated targeting provisions (e.g. priority or preference for a particular group of participants, or the spending of a portion of the program funds on a particular group of participants), veteran's priority is applied as follows:

- Individuals meeting both veteran and mandated priorities, or spending requirements or limitations receive priority/preference for the program.

- Non-veterans within the program's mandatory priority receive preference over eligible veterans outside the program specific mandatory priorities, spending requirements, or limitations.

- Eligible veterans outside the program-specific mandatory or spending requirement or limitation receive priority over non-veterans outside the priority or spending requirement or limitation (once the spending requirement or limitation is met).

4. Priority of Service and Eligibility for Persons with Disabilities (PWDs)

In 1994 the federal government approved Pennsylvania as an "Order of Selection" state which allows for federal funds and resources to be expended only for eligible persons with the most significant disabilities. The priority of services under this order is;

- First Priority: Most Significantly Disabled (MSD)
- Second Priority: Significantly Disabled (SD)
- Third Priority: Non-Significantly Disabled (NSD)

For purposes of participation with OVR, a Financial Needs Test (FNT) is used to determined financial responsibility; however, those who receive Social Security Income (SSI) due to a childhood onset disability or Social Security Disability Income (SSDI) due to a working adult onset disability by law are exempt from OVR's FNT.

When PA CareerLink® partners recognize an individual as a PWD they may refer the individual to OVR for employment assistance as they determine appropriate. When an individual is found eligible for services from OVR and through the WIA, the individual is not required to utilize OVR, but is able to receive the WIA benefits through the OVR counselor, PA CareerLink® staff or PA CareerLink® partners. OVR staff will assist PA CareerLink® staff in the identification of anticipated levels of services for PWD.

When an individual is determined not to meet the OVR eligibility criteria of MSD, the VRC provides referral resources including identification of the local PA CareerLink® or other Vocational and Human Service Agencies that can provide support or assistance. PA CareerLink® staff and partners can refer PWDs who are not eligible for or who refuse services from PA OVR to local County Human Services Office of Mental Health and Substance Abuse or Office of Developmental Programs administered by the Pennsylvania Department of Public Welfare (DPW) and regional Centers for Independent Living (CILS).

Statewide there are 21 district offices staffed with trained, professional Vocational Rehabilitation Counselors which serve Pennsylvania in all 67 counties. The Hiram G. Andrews Center in Johnstown provides vocational training and comprehensive rehabilitation services to people from across the state. OVR's Bureau of Blindness and Visual Services also provides

specialized services to blind and visually impaired individuals. These services are designed to increase an individual's independence and employability.

Appendix H – Statewide Industry Employment Projections

Statewide Industry Employment Projections for Occupations with the Highest Percentage of Workers Aged 55-plus					
NAICS Code	Industry Title	Empl. (2008)	Proj. Empl. (2018)	Volume Empl. Change (2008-18)	Percent Empl. Change (2008-18)
	TOTAL JOBS	**6,234,130**	**6,382,170**	**148,040**	**2.4**
3311	Iron & Steel Mills & Ferroalloys	14,230	12,220	-2,010	-14.1
4889	Other Support Activities For Transportation	1,440	1,510	70	4.9
3152	Cut & Sew Apparel Mfg	6,930	3,370	-3,560	-51.4
4852	Interurban & Rural Bus Transportation	730	800	70	9.6
4855	Charter Bus Ind.	2,690	2,800	110	4.1
8122	Death Care Services	7,080	7,550	470	6.6
4854	School & Employee Bus Transportation	21,810	23,000	1,190	5.5
4531	Florists	4,350	4,170	-180	-4.1
3272	Glass & Glass Product Mfg	7,270	6,270	-1,000	-13.8
2372	Land Subdivision	1,440	1,500	60	4.2
3253	Agricultural Chemical Mfg	700	530	-170	-24.3
3149	Other Textile Product Mills	2,930	1,500	-1,430	-48.8
4851	Urban Transit Systems	530	570	40	7.6
4231	Motor Vehicle/Part Merchant Wholesalers	20,360	19,520	-840	-4.1
3132	Fabric Mills	3,250	1,600	-1,650	-50.8
8131	Religious Organizations	77,450	72,480	-4,970	-6.4
3141	Textile Furnishings Mills	2,280	1,160	-1,120	-49.1
3324	Boiler, Tank & Shipping Container Mfg	5,910	5,250	-660	-11.2
3329	Other Fabricated Metal Product Mfg	13,300	11,230	-2,070	-15.6
5191	Other Information Services	8,600	9,110	510	5.9
5615	Travel Arrangement & Reservation Services	8,410	8,560	150	1.8
7213	Rooming & Boarding Houses	250	230	-20	-8.0
3322	Cutlery & Handtool Mfg	3,280	2,470	-810	-24.7
7121	Museums, Parks & Historical Sites	6,490	7,220	730	11.3
9992	State Gov't, Except Education & Hospitals	97,630	98,550	920	0.9
Source: *2008-18 Long-Term Industry Employment Projections*					

Statewide Occupational Employment Projections for the Top-Employing Occupations in the Industries with the Highest Percentage of Workers Aged 55-plus								
						Annual Openings		
SOC Code	SOC Title	Educ. Level	Empl. (2008)	Proj. Empl. (2018)	Empl. Change (2008-18)	Due to Growth	Due to Replace.	Total
53-3022	Bus Drivers: School or Special Client	MT OJT	26,250	27,270	3.89	102	344	446
43-9061	Office Clerks, General	ST OJT	163,680	166,250	1.57	257	3,004	3,261
33-3012	Correctional Officers & Jailers	MT OJT	17,710	20,320	14.74	261	405	666
43-6014	Secretaries & Administrative Assistants	ST OJT	94,060	85,480	-9.12	0	1,498	1,498
53-3021	Bus Drivers: Transit & Intercity	MT OJT	14,850	15,220	2.49	37	194	231
49-9042	Maintenance & Repair Workers, General	MT OJT	65,710	66,250	0.82	55	162	217
21-2021	Directors, Religious Activities & Education	BD+	6,860	6,530	-4.81	0	157	157
21-2011	Clergy	BD	7,210	6,960	-3.47	0	97	97
41-2031	Retail Salespersons	ST OJT	206,300	214,410	3.93	811	6,352	7,163
37-2011	Janitors & Cleaners	ST OJT	109,170	113,200	3.69	403	2,090	2,493
43-9022	Word Processors & Typists	ST OJT	13,960	11,540	-17.34	0	264	264
43-1011	Supervisors - Office & Administrative Support	WK EXP	51,800	49,460	-4.52	0	1,069	1,069
43-3031	Bookkeeping, Accounting & Auditing Clerks	MT OJT	82,980	84,900	2.31	192	1,299	1,491
23-1023	Judges, Magistrate Judges & Magistrates	PhD	1,010	1,030	1.98	2	19	21
41-4012	Sales Representatives	MT OJT	85,300	86,550	1.47	125	1,882	2,007
51-6031	Sewing Machine Operators	ST OJT	7,600	4,990	-34.34	0	73	73
37-2012	Maids & Housekeeping Cleaners	ST OJT	37,500	39,740	5.97	224	706	930
53-7062	Laborers & Material Movers, Hand	ST OJT	110,730	103,040	-6.94	0	3,544	3,544
33-3051	Police & Sheriff's Patrol Officers	MT OJT	28,060	28,950	3.17	88	750	838
27-2042	Musicians & Singers	LT OJT	8,930	8,500	-4.82	0	181	181
31-1012	Nursing Aides, Orderlies & Attendants	PS	80,590	88,440	9.74	785	721	1,506
37-3011	Landscaping & Groundskeeping Workers	ST OJT	46,520	50,590	8.75	408	614	1,022
25-2021	Elementary School Teachers	BD	81,880	83,520	2	164	1,788	1,952
41-3041	Travel Agents	MT OJT	3,630	3,620	-0.28	0	25	25

53-3033	Light Truck or Delivery Services Drivers	ST OJT	43,210	42,970	-0.56	0	767	767
43-4121	Library Assistants, Clerical	ST OJT	6,130	6,210	1.31	8	194	202
51-1011	Supervisors - Production & Operating Workers	PS	30,790	27,460	-10.82	0	515	515
13-2011	Accountants & Auditors	BD	55,770	58,530	4.95	275	981	1,256
51-2092	Team Assemblers	MT OJT	47,090	41,400	-12.08	0	978	978
43-4051	Customer Service Representatives	ST OJT	100,840	112,250	11.31	1,141	2,808	3,949
51-9061	Inspectors, Testers, Sorters, Samplers & Weighers	MT OJT	23,270	20,430	-12.2	0	345	345
49-3031	Bus & Truck Mechanics & Diesel Engine Specialists	LT OJT	12,120	12,580	3.8	46	264	310
51-9198	Helpers--Production Workers	ST OJT	28,170	25,540	-9.34	0	692	692
35-2012	Cooks, Institution & Cafeteria	ST OJT	19,320	19,590	1.4	27	523	550
27-2041	Music Directors & Composers	BD+	3,340	3,080	-7.78	0	68	68
49-1011	Supervisors - Mechanics, Installers & Repairers	WK EXP	14,920	14,760	-1.07	0	350	350
43-6011	Executive Secretaries & Executive Administrative Asst's	WK EXP	42,950	43,880	2.17	92	684	776
21-2099	Religious Workers, All Other	BD	1,910	1,830	-4.19	0	21	21
39-9011	Childcare Workers	ST OJT	44,140	49,710	12.62	557	1,268	1,825
51-4121	Welders, Cutters, Solderers & Brazers	MT OJT	18,330	16,780	-8.46	0	388	388
39-4021	Funeral Attendants	ST OJT	1,750	1,890	8	14	42	56
51-4031	Cutting, Punching & Press Machine Operators	MT OJT	13,290	10,530	-20.77	0	318	318
25-4021	Librarians	MD	7,420	7,270	-2.02	0	201	201
53-3031	Driver/Sales Workers	ST OJT	19,320	17,920	-7.25	0	343	343
25-4031	Library Technicians	PS	5,130	5,230	1.95	10	249	259
51-4041	Machinists	LT OJT	20,660	19,400	-6.1	0	319	319
25-3021	Self-Enrichment Education Teachers	WK EXP	8,920	9,170	2.8	25	95	120
41-2022	Parts Salespersons	MT OJT	10,520	9,480	-9.89	0	118	118
43-4061	Eligibility Interviewers, Government Programs	AD	4,360	4,660	6.88	30	76	106
33-1012	Supervisors - Police & Detectives	WK EXP	3,830	3,900	1.83	8	120	128
Source: *2008-18 Long-Term Occupational Employment Projections*								

Appendix I – OJT

Statewide Occupational Employment Projections for Short- or Moderate-Term On-the-Job Training Occupations with the Most Annual Openings

						Annual Openings		
SOC Code	SOC Title	Educ. Level	Empl. (2008)	Proj. Empl. (2018)	Empl. Change (2008-2018)	Due to Growth	Due to Replace	Total
41-2011	Cashiers	ST OJT	156,740	150,390	-4.05	0	7,453	7,453
41-2031	Retail Salespersons	ST OJT	206,300	214,410	3.93	811	6,352	7,163
35-3031	Waiters & Waitresses	ST OJT	97,160	104,460	7.51	730	5,278	6,008
43-4051	Customer Service Representatives	ST OJT	100,840	112,250	11.31	1,141	2,808	3,949
35-3021	Combined Food Preparation & Serving Workers	ST OJT	126,380	139,390	10.29	1,301	2,397	3,698
53-7062	Laborers & Freight, Stock & Material Movers, Hand	ST OJT	110,730	103,040	-6.94	0	3,544	3,544
43-9061	Office Clerks, General	ST OJT	163,680	166,250	1.57	257	3,004	3,261
37-2011	Janitors & Cleaners	ST OJT	109,170	113,200	3.69	403	2,090	2,493
41-4012	Sales Representatives	MT OJT	85,300	86,550	1.47	125	1,882	2,007
39-9011	Child Care Workers	ST OJT	44,140	49,710	12.62	557	1,268	1,825
31-1011	Home Health Aides	ST OJT	54,110	66,380	22.68	1,227	484	1,711
43-5081	Stock Clerks & Order Fillers	ST OJT	71,810	62,890	-12.42	0	1,704	1,704
43-4171	Receptionists & Information Clerks	ST OJT	52,830	55,980	5.96	314	1,292	1,606
35-2021	Food Preparation Workers	ST OJT	35,480	38,940	9.75	346	1,231	1,577
43-6014	Secretaries	ST OJT	94,060	85,480	-9.12	0	1,498	1,498
43-3031	Bookkeeping, Accounting, & Auditing Clerks	MT OJT	82,980	84,900	2.31	192	1,299	1,491
39-9021	Personal & Home Care Aides	ST OJT	37,190	45,570	22.53	838	630	1,468
35-3011	Bartenders	ST OJT	30,220	33,470	10.75	326	1,099	1,425
43-3071	Tellers	ST OJT	30,870	31,600	2.36	73	1,350	1,423
45-2092	Farmworkers & Laborers - Crop, Nursery, & Greenhouse	ST OJT	34,910	39,630	13.52	472	874	1,346
35-2014	Cooks, Restaurant	MT OJT	34,440	37,690	9.44	324	933	1,257
35-3022	Counter Attendants - Cafeteria, Food Concession, & Coffee Shop	ST OJT	15,230	16,230	6.57	101	1,057	1,158
35-9031	Hosts & Hostesses - Restaurant, Lounge & Coffee Shop	ST OJT	14,820	15,910	7.35	109	1,013	1,122
33-9032	Security Guards	ST OJT	38,990	41,640	6.8	265	791	1,056
35-9021	Dishwashers	ST OJT	22,230	23,600	6.16	138	907	1,045
37-3011	Landscaping & Groundskeeping Workers	ST OJT	46,520	50,590	8.75	408	614	1,022
51-2092	Team Assemblers	MT OJT	47,090	41,400	-12.08	0	978	978
37-2012	Maids & Housekeeping Cleaners	ST OJT	37,500	39,740	5.97	224	706	930
29-2052	Pharmacy Technicians	MT OJT	15,010	19,500	29.91	448	459	907
25-9041	Teacher Assistants	ST OJT	54,490	53,790	-1.28	0	887	887
41-2021	Counter & Rental Clerks	ST OJT	17,240	19,230	11.54	199	657	856
35-9011	Dining Room & Cafeteria Attendants & Bartender Helpers	ST OJT	15,980	17,700	10.76	173	669	842
33-3051	Police & Sheriff's Patrol Officers	MT OJT	28,060	28,950	3.17	88	750	838

53-7051	Industrial Truck & Tractor Oprs	ST OJT	32,880	30,210	-8.12	0	830	830
31-9092	Medical Assistants	MT OJT	23,390	28,770	23.	538	290	828
53-3033	Truck Drivers, Light or Delivery Services	ST OJT	43,210	42,970	-0.56	0	767	767
43-5071	Shipping, Receiving, & Traffic Clerks	ST OJT	29,050	27,480	-5.4	0	696	696
51-9198	Helpers, Production Workers	ST OJT	28,170	25,540	-9.34	0	692	692
33-3012	Correctional Officers & Jailers	MT OJT	17,710	20,320	14.74	261	405	666
39-3091	Amusement & Recreation Attendants	ST OJT	10,290	11,510	11.86	122	508	630
21-1093	Social & Human Service Assistants	ST OJT	20,610	24,330	18.05	372	239	611
35-2012	Cooks, Institution & Cafeteria	ST OJT	19,320	19,590	1.4	27	523	550
53-7061	Cleaners of Vehicles & Equipment	ST OJT	13,400	13,480	0.6	9	511	520
53-7064	Packers & Packagers, Hand	ST OJT	40,200	33,280	-17.21	0	490	490
43-3011	Bill & Account Collectors	MT OJT	17,520	19,660	12.21	214	265	479
43-6013	Medical Secretaries	MT OJT	20,370	21,750	6.77	139	324	463
33-9092	Lifeguards, Ski Patrol, & Other Protective Service Workers	ST OJT	5,560	6,070	9.17	50	412	462
43-5052	Postal Service Mail Carriers	ST OJT	15,730	13,960	-11.25	0	461	461
41-9041	Telemarketers	ST OJT	13,040	10,410	-20.17	0	459	459
39-3031	Ushers, Lobby Attendants, & Ticket Takers	ST OJT	5,690	6,190	8.79	50	399	449
Source: ***2008-18 Long-Term Occupational Employment Projections***								

Bureau of Labor Statistics, Office of Occupational Statistics and Employment Projections, December 6, 2011

Definitions for the Education and Training Classification System

The Bureau of Labor Statistics (BLS) education and training classification system consists of three categories of information that BLS analysts have assigned to each detailed occupation in the 2010–2020 National Employment Matrix. The categories are 1) typical education needed for entry, 2) commonly required work experience in a related occupation, and 3) typical on-the-job training needed to obtain competency in the occupation. Each category and its related choice selections are defined below. This education and training system replaces the one used for the 2008–2018 projections cycle.

Typical education needed for entry. This category best describes the typical level of education that most workers need to enter the occupation. Occupations are assigned one of the following eight education levels:

Doctoral or professional degree. Completion of a doctoral degree (Ph.D.) usually requires at least 3 years of full-time academic work beyond a bachelor's degree. Completion of a professional degree usually requires at least 3 years of full- time academic study beyond a bachelor's degree. Examples of occupations for which a professional degree is the typical form of entry-level education include lawyers, physicians and surgeons, and dentists.

Master's degree. Completion of this degree usually requires 1 or 2 years of full-time academic study beyond a bachelor's degree. Examples of occupations in this category include statisticians, physician assistants, and educational, vocational, and school counselors.

Bachelor's degree. Completion of this degree generally requires at least 4 years, but not more than 5 years, of full-time academic study beyond high school. Examples of occupations in this category include budget analysts, dietitians, and civil engineers.

Associate's degree. Completion of this degree usually requires at least 2 years but not more than 4 years of full-time academic study beyond high school. Examples of occupations in this category include mechanical drafters, respiratory therapists, and dental hygienists.

Postsecondary non-degree award. These programs lead to a certificate or other award, but not a degree. The certificate is awarded by the educational institution and is the result of completing formal postsecondary schooling. Certification, which is issued by a professional organization or certifying body, is not included here. Some postsecondary nondegree award programs last only a few weeks, while others may last 1 to 2 years. Examples of occupations in this category include nursing aides, emergency medical technicians (EMTs) and paramedics, and hairstylists.

Some college, no degree. This category signifies the achievement of a high school diploma or equivalent plus the completion of one or more postsecondary courses that did not result in a degree or award. Examples of occupations in this category are actors and computer support specialists.

High school diploma or equivalent. This category signifies the completion of high school or an equivalent program resulting in the award of a high school diploma or an equivalent, such as the General Educational Development (GED) credential. Examples of occupations in this category include social and human service assistants and pharmacy technicians.

Less than high school. This category signifies the completion of any level of primary or secondary education that did not result in the award of a high school diploma or equivalent. Examples of occupations in this category include janitors and cleaners, cashiers, and carpet installers.

Work experience in a related occupation. For some occupations, work experience in a related occupation may be a typical method of entry. The majority of occupations in this category are first-line supervisors or managers of service, sales, and production occupations. Although work experience in a related occupation is beneficial for all occupations, this metric is meant to capture work experience that is commonly considered necessary by employers, or is a commonly accepted substitute for other, more formal types of training or education.

Occupations are assigned one of the following four categories that deal with length of time spent gaining related work experience:

More than 5 years. This is assigned to occupations if more than 5 years of work experience in a related occupation is typically needed for entry. Examples include construction managers and computer and information systems managers.

1 to 5 years. To enter occupations in this category, workers typically need 1-5 years of work experience in a related occupation. Examples include marketing managers and database administrators.

Less than 1 year. Examples of occupations that typically need less than 1 year of work experience in a related occupation include restaurant cooks and industrial truck and tractor operators.

None. No work experience in a related occupation is typically needed. Examples are audiologists and actuaries.

Typical on-the-job training needed to attain competency in the occupation. This category encompasses any additional training or preparation that is typically needed, once employed in an occupation, to attain competency in the skills needed in that occupation. Training is occupation-specific rather than job-specific; skills learned can be transferred to another job in the same occupation. Occupations are assigned one of the following six training categories:

Internship/residency. An internship or residency is training that involves preparation in a field such as medicine or teaching, generally under supervision in a professional setting, such as a hospital or classroom. This type of training may occur before one is employed. Completion of an internship or residency program is commonly required for state licensure or certification in fields including medicine, counseling, architecture, and teaching. This category does not include internships that are suggested for advancement. Examples of occupations in the internship/residency category include physicians and surgeons and marriage and family therapists.

Apprenticeship. An apprenticeship is a formal relationship between a worker and sponsor that consists of a combination of on-the-job training and related occupation-specific technical instruction in which the worker learns the practical and theoretical aspects of an occupation. Apprenticeship programs are sponsored by individual employers, joint employer-and- labor groups, and employer associations. The typical apprenticeship program provides at least 144 hours of occupation- specific technical instruction and 2,000 hours of on-the-job training per year over a 3-to-5 year period. Examples of occupations in the apprenticeship category include electricians and structural iron and steel workers.

Long-term on-the-job training. More than 12 months of on-the-job training or, alternatively, combined work experience and formal classroom instruction, are needed for workers to develop the skills to attain competency. Training is occupation specific rather than job specific; therefore, skills learned can be transferred to another job in the same occupation. This on-the-job training category also includes employer-sponsored training programs. Such programs include those offered by fire and police academies and schools for air traffic controllers and flight attendants. In other occupations—nuclear power reactor operators, for example—trainees take formal courses, often provided at the jobsite, to prepare for the required licensing exams. This category excludes apprenticeships. Examples of occupations in the long-term on-the-job training category include opticians and automotive service technicians and mechanics.

Moderate-term on-the-job training. Skills needed for a worker to attain competency in an occupation that can be acquired during 1 to 12 months of combined on-the-job experience and informal training. Training is occupation-specific rather than job-specific; therefore, skills learned can be transferred to another job in the same occupation. This on-the-job training category also includes employer-sponsored training programs. Examples of occupations in the moderate- term category include school bus drivers and advertising sales agents.

Short-term on-the-job training. Skills needed for a worker to attain competency in an occupation that can be acquired during 1 month or less of on-the-job experience and informal training. Training is occupation-specific rather than job specific; therefore, skills learned can be transferred to another job in the same occupation. This on-the-job training category also includes employer sponsored training programs. Examples of occupations in the short-term category include retail salespersons and maids and housekeeping cleaners.

None. There is no additional occupation-specific training or preparation typically required to attain competency in the occupation. Examples of occupations that do not require occupation-specific on-the-job training include geographers and pharmacists.

Appendix J – Ratio of Income to Poverty for the Population 55 and Over

Ratio of Income to Poverty for the Population 55 and over, Pennsylvania Counties: 2006-2010						
Source: U.S. Bureau of the Census; 2006-2010 American Community Survey						
Prepared by the Pennsylvania State Data Center						
May 2, 2012						
			Population 55 years and over:			
Geography	Total Population For Whom Poverty Status is Determined	Total Population 55 and over	Under 125 Percent of the Poverty Level		At or Above 125 Pecent of the Poverty Level	
			Number	Percent	Number	Percent
Pennsylvania	12,199,544	3,357,536	423,333	12.6%	2,934,203	87.4%
Adams	96,627	26,980	2,362	8.8%	24,618	91.2%
Allegheny	1,190,349	350,441	44,826	12.8%	305,615	87.2%
Armstrong	68,582	21,301	2,916	13.7%	18,385	86.3%
Beaver	168,015	53,089	5,565	10.5%	47,524	89.5%
Bedford	49,451	15,377	2,521	16.4%	12,856	83.6%
Berks	392,955	102,082	11,006	10.8%	91,076	89.2%
Blair	123,527	37,014	5,072	13.7%	31,942	86.3%
Bradford	61,515	18,633	3,152	16.9%	15,481	83.1%
Bucks	612,643	162,480	11,544	7.1%	150,936	92.9%
Butler	177,972	47,872	4,401	9.2%	43,471	90.8%
Cambria	137,042	45,677	6,126	13.4%	39,551	86.6%
Cameron	5,121	1,815	224	12.3%	1,591	87.7%
Carbon	63,695	19,444	2,109	10.8%	17,335	89.2%
Centre	132,426	29,878	2,269	7.6%	27,609	92.4%
Chester	477,949	115,653	7,657	6.6%	107,996	93.4%
Clarion	38,197	11,318	1,490	13.2%	9,828	86.8%
Clearfield	77,650	23,594	3,633	15.4%	19,961	84.6%
Clinton	36,030	10,685	1,476	13.8%	9,209	86.2%
Columbia	62,092	18,067	2,347	13.0%	15,720	87.0%
Crawford	85,601	25,698	4,033	15.7%	21,665	84.3%
Cumberland	216,253	62,341	4,858	7.8%	57,483	92.2%
Dauphin	260,705	67,449	7,335	10.9%	60,114	89.1%
Delaware	536,760	138,003	12,616	9.1%	125,387	90.9%
Elk	32,007	9,943	1,205	12.1%	8,738	87.9%
Erie	266,798	70,637	9,099	12.9%	61,538	87.1%
Fayette	134,728	42,558	7,823	18.4%	34,735	81.6%
Forest	5,357	2,238	343	15.3%	1,895	84.7%

Franklin	142,505	40,409	4,097	10.1%	36,312	89.9%
Fulton	14,762	4,336	571	13.2%	3,765	86.8%
Greene	36,178	10,421	1,924	18.5%	8,497	81.5%
Huntingdon	40,798	12,597	1,851	14.7%	10,746	85.3%
Indiana	84,051	24,002	3,103	12.9%	20,899	87.1%
Jefferson	44,844	13,673	2,304	16.9%	11,369	83.1%
Juniata	24,258	6,913	927	13.4%	5,986	86.6%
Lackawanna	205,375	63,020	8,744	13.9%	54,276	86.1%
Lancaster	496,623	128,104	12,367	9.7%	115,737	90.3%
Lawrence	89,173	28,538	3,854	13.5%	24,684	86.5%
Lebanon	127,572	37,075	4,322	11.7%	32,753	88.3%
Lehigh	334,684	87,558	10,248	11.7%	77,310	88.3%
Luzerne	309,603	96,181	14,368	14.9%	81,813	85.1%
Lycoming	111,609	32,310	4,376	13.5%	27,934	86.5%
McKean	41,138	11,972	1,467	12.3%	10,505	87.7%
Mercer	109,755	34,684	3,940	11.4%	30,744	88.6%
Mifflin	45,976	13,946	2,152	15.4%	11,794	84.6%
Monroe	163,911	40,436	4,367	10.8%	36,069	89.2%
Montgomery	770,197	203,896	14,178	7.0%	189,718	93.0%
Montour	17,797	5,426	724	13.3%	4,702	86.7%
Northampton	281,417	78,649	7,243	9.2%	71,406	90.8%
Northumberland	90,634	28,869	5,302	18.4%	23,567	81.6%
Perry	44,677	11,845	1,113	9.4%	10,732	90.6%
Philadelphia	1,460,844	330,420	83,212	25.2%	247,208	74.8%
Pike	56,424	16,346	1,601	9.8%	14,745	90.2%
Potter	17,181	5,615	923	16.4%	4,692	83.6%
Schuylkill	140,958	44,506	6,707	15.1%	37,799	84.9%
Snyder	37,197	10,576	1,630	15.4%	8,946	84.6%
Somerset	74,414	24,232	4,042	16.7%	20,190	83.3%
Sullivan	6,199	2,306	400	17.3%	1,906	82.7%
Susquehanna	42,446	13,434	1,816	13.5%	11,618	86.5%
Tioga	40,049	12,436	1,878	15.1%	10,558	84.9%
Union	35,318	10,506	1,218	11.6%	9,288	88.4%
Venango	54,091	16,852	2,172	12.9%	14,680	87.1%
Warren	40,930	13,352	1,600	12.0%	11,752	88.0%
Washington	202,139	61,979	7,131	11.5%	54,848	88.5%
Wayne	48,705	16,445	2,000	12.2%	14,445	87.8%
Westmoreland	357,681	116,102	13,569	11.7%	102,533	88.3%
Wyoming	27,551	8,233	982	11.9%	7,251	88.1%
York	419,833	109,069	10,902	10.0%	98,167	90.0%

Appendix K – Greatest Economic Need Data

COMMONWEALTH OF PENNSYLVANIA GREATEST ECONOMIC NEED DATA FOR THE YEAR ENDING JUNE 30, 2011			
	TOTAL PARTICIPANTS SERVED IN FY 10-11	**PARTICIPANTS BELOW 100% OF POVERTY**	**% OF INDIVIDUALS BELOW POVERTY TO CURRENT ENROLLMENT**
SCSEP GRANTEE			
American Association of Retired Persons	1055	979	93%
Associacion Nacional Pro Personas Mayores	285	260	91%
Experience Works	434	380	88%
National Urban League	255	227	89%
National Asian Pacific Center on Aging	112	105	94%
National Caucus/Center on Black Aged	351	315	90%
National Council on the Aging	1159	881	76%
Goodwill Industries	465	415	89%
Senior Service America	434	305	70%
Pennsylvania Department of Aging	960	808	84%
STATEWIDE TOTALS	5510	4675	**85%**
STATEWIDE PERCENTAGE OF PERSONS WITH GREATEST ECONOMIC NEED (BELOW POVERTY LEVEL) COMPARED TO TOTAL ELIGIBLE POPULATION BASED ON THE 2006-2010 AMERICAN COMMUNITY SURVEY IS 66% (277,921/423,333)			
NOTE: THE PERCENT OF INDIVIDUALS SERVED BY THE SCSEP PROGRAM THAT ARE BELOW THE POVERTY LEVEL (85%) FAR EXCEEDS THE STATEWIDE PERCENTAGE OF ELIGIBLE INDIVIDUALS THAT ARE BELOW THE POVERTY LEVEL (66%).			

Appendix L – SCSEP Minority Data

COMMONWEALTH OF PENNSYLVANIA - SCSEP MINORITY DATA FOR YEAR ENDING JUNE 30, 2011								
SCSEP GRANTEE	**TOTAL PARTIC. SERVED IN FY 10-11**	**# OF BLACK PARTIC.**	**# OF HISPANIC PARTIC.**	**# OF AMERICAN INDIAN PARTIC.**	**# OF ASIAN PARTIC.**	**# OF NATIVE HAWAIIAN OR PAC.ISLANDER PARTIC.**	**TOTAL MINORITY PARTIC.**	**% OF PARTIC. THAT ARE MINORITIES**
American Assoc. of Retired Persons	1055	455	125	5	6	1	592	56%
Associacion Nacional Pro Personas Mayores	285	30	253	0	2	0	285	100%
Experience Works	434	23	3	4	8	0	38	9%
National Urban League	255	210	2	2	2	0	216	85%
Nat. Asian Pacific Center on Aging	112	35	2	0	67	0	104	93%
National Caucus/Center on Black Aged	351	326	6	2	3		337	96%
National Council on the Aging	1159	232	32	9	5	0	278	24%
Goodwill Industries	465	244	11	2	9	0	266	57%
Senior Service America	434	94	3	0	5	3	105	24%
Pennsylvania Department of Aging	960	342	22	6	15	3	388	40%
STATEWIDE TOTALS	5510	1991	459	30	122	7	2609	**47%**

	MOST IN NEED	**MOST IN NEED**	**PERCENT OF**
SCSEP GRANTEE	**ACTUAL**	**GOAL**	**GOAL**
American Association of Retired Persons	2.93	2.61	112.26%
Associacion Nacional Pro Personas Mayores	3.77	2.42	155.79%
Experience Works	3.45	2.8	123.21%
National Urban League	2.25	2.25	100.00%
National Asian Pacific Center on Aging	2.45	2.75	89.09%
National Caucus/Center on Black Aged	2.32	2.36	98.31%
National Council on the Aging	2.69	2.45	109.80%
Goodwill Industries	2.32	2.46	94.31%
Senior Service America	2.11	2.2	95.91%
Pennsylvania Department of Aging	2.41	2.51	96.02%
STATEWIDE TOTALS		248.10%	107.47%

Appendix M – Limited English Proficiency (LEP) Data

COMMONWEALTH OF PENNSYLVANIA LIMITED ENGLISH PROFICIENCY (LEP) DATA FOR THE YEAR ENDING JUNE 30, 2011			
SCSEP GRANTEE	**TOTAL PARTICIPANTS SERVED IN FY 10-11**	**PARTICIPANTS WITH LEP**	**PERCENT OF PARTICIPANTS WITH LEP**
American Association of Retired Persons	1055	117	11.09%
Associacion Nacional Pro Personas Mayores	285	242	84.91%
Experience Works	434	7	1.61%
National Urban League	255	3	1.18%
National Asian Pacific Center on Aging	112	70	62.50%
National Caucus/Center on Black Aged	351	1	0.28%
National Council on the Aging	1159	14	1.21%
Goodwill Industries	465	18	3.87%
Senior Service America	434	2	0.46%
Pennsylvania Department of Aging	960	37	3.85%
STATEWIDE TOTALS	5510	511	9%
STATEWIDE PERCENTAGE OF PERSONS WITH LEP IS 9%.			
NOTE: THE PERCENT OF INDIVIDUALS SERVED BY THE SCSEP PROGRAM WITH LEP (9%) EXCEEDS THE STATEWIDE PERCENTAGE OF ELIGIBLE INDIVIDUALS WITH LEP (6%)			

Appendix N – Rapid Response Overview Attachment

Overview of Rapid Response

Rapid Response is an early intervention service that assists workers and employers affected by layoffs, plant closures, or natural disasters. It provides information on and access to the commonwealth's PA CareerLink® and Unemployment Compensation systems to help transition workers into reemployment.

The primary objective of the Rapid Response program is to provide workers with the resources and services they need to allow them to find new jobs or get the training and education needed for new careers so that they can get back to work quickly.

Rapid Response also offers assistance to local communities so that a proactive and coordinated response can be designed, and access to Pennsylvania's economic development designed to help businesses that are at risk of closing to keep their doors open.

Rapid Response activities are triggered when the Department of Labor and Industry learns of a planned closure or layoff either by receiving a notice under the Federal Worker Adjustment and Retraining Notification (WARN) Act, through the media, or by information provided by community and business leaders. Services may also be offered when Pennsylvania experiences mass job dislocation as the result of a disaster. There is no charge to the employer or employee for these services and they are provided regardless of the reason for the layoff.

Through Rapid Response, worker orientation meetings are held either at the workplace or at a convenient site to provide workers with a wide range of information about benefits and services that are critical for a successful transition to new employment. Orientation meetings are held preferably prior to the layoff date and on company time but the Rapid Response Specialist will customize a program to accommodate the specific needs of each layoff event. Information is provided on the following topics.

- Unemployment Insurance;
- Health and pension benefits;
- Job search activities;
- Education services;
- Training Program;
- Trade Act and Alternate Trade Act Assistance Programs
- Social Services programs;
- Community and economic development activities;
- Emergency assistance; and
- Crisis counseling.

Community Benefits

Community involvement forms the basis for some of the most dynamic and effective transition services available. The benefits of Rapid Response to the community include:

- Working with local and state elected officials;
- Helping to save its tax base by keeping workers employed;
- Lessening the economic impact on other businesses within the community;
- Responding to job and business loss when a natural disaster occurs;
- Coordinating available resources by tapping into the community's service providers;
- Reducing emotional and financial stress on the community by offering workshops for unemployed workers; and
- Coordinating support groups for unemployed workers

Employer Benefits

When employers contact Pennsylvania's Rapid Response Coordination Unit, they can expect:

- A quick response to transition planning needs;
- Confidentiality concerning business decisions;
- Assistance in understanding government regulations;
- Information about alternatives that may reduce or avoid layoffs;
- For small businesses, referral to an agency that can help in re-structuring to avoid closing the business;

Worker Benefits

The Rapid Response program helps laid off workers turn the challenge of a layoff into an opportunity by providing information about, and access to, the following services:

- Unemployment Compensation;
- Children's Health Insurance Program (CHIP)
- Career counseling, resume preparation and job search assistance;
- Education and training opportunities, including the Trade Assistance Act;
- Supportive services available within the local area;

Appendix O – Waiver Requests

United States Department of Labor, Employment and Training Administration: WIA/W-P Waiver Request Form

Last updated 8-19-2011
OMB Number 1205-0398

Subject: **Performance Measures for Workforce Investment Act Title I; Wagner-Peyser Act (Labor Exchange); Jobs for Veterans Act of 2002; and Trade Act**
Date: **August 31, 2012**
State: **Commonwealth of Pennsylvania**
Agency: **PA Department of Labor & Industry (L&I)**

Statutory and/or regulatory requirements to be waived:
Workforce Investment Act §189(i)(4), §129, §134, §168; 20 CFR WIA Final Rules §652.3 §661.400, §661.410, §661.420, §666.100; Wagner-Peyser Act as amended, Section 10(c) and 3(c); Title 38 United States Code as amended by the Jobs for Veterans Act of 2002; the proposed Trade Act performance measures.

The Commonwealth of Pennsylvania seeks a waiver of the 17 (15 core and 2 customer satisfaction) indicators of performance for employment and training activities authorized under sections 129 and 134 of the Workforce Investment Act; the four Labor Exchange Performance Measures authorized under the Wagner-Peyser Act, the three Trade Act, and the three Veterans Performance Measures authorized under Title 38 United States Code as amended by the Jobs for Veterans Act of 2002. This waiver request will enable Pennsylvania's workforce development partners to implement the six (3adult and 3 youth) new common performance measures being finalized by the United States Department of Labor and five other federal agencies.

These performance measures focus on attainment of education and credentials, placement and retention in employment, and efficiency. Pennsylvania's intent mirrors that of the Workforce Investment Act and WIA Reauthorization — to simplify and streamline the performance accountability system that is an integral part of a reformed workforce development system. This request is in keeping with the commonwealth's vision of a more knowledgeable, skilled, engaged and flexible workforce. It has been Pennsylvania's experience and is also the consensus opinion of most workforce development professionals that the current performance measurement system is too cumbersome to be a viable program management tool across departments. A set of clear and understandable outcome measures ensures accountability across all workforce development programs while improving program management and performance.

Common performance measures across programs and data collected for them will also provide necessary information to help effectively oversee the workforce investment system. They will enhance the commonwealth's ability to assess the effectiveness and impact of workforce development efforts. Common measures will provide a more effective means of determining performance of the various programs, accomplishing this through a system-wide perspective. Such a cross-program strategy is consistent with the move toward integration of programs as

embodied in the Workforce Investment Act's one-stop system. Actions undertaken to remove state or local barriers: There are no state or local statutory or regulatory barriers to impede implementation of this waiver.

Goals and expected programmatic outcomes of waiver:

- Provide for a simplified and streamlined performance measurement system.
- Provide for integrated system wide performance accountability.
- Provide commonality across workforce development programs.
- Reduce paperwork and labor costs associated with performance data collection.
- Provide clear and understandable information to Congressional leaders and the general public concerning the use of public funds and return on investment.
- Provide a more useful program management tool.
- Provide for customer-driven instead of program-driven outcomes.
- Provide for better service coordination and information sharing among programs.
- Serve as a catalyst to begin the process of using the common performance measures across programs.

Individuals impacted by the waiver:
Approval of this waiver will positively impact all customers of the workforce investment system by providing accountability while improving program management and performance.

Process for monitoring progress in implementation:
The Pennsylvania Department of Labor & Industry is the state administrative entity for the Workforce Investment Act, the Wagner-Peyser Act, Trade Act, and Veterans Programs. The Pennsylvania Department of Labor &Industry will monitor the implementation and impact of the waiver, through a combination of reporting from the local level, state oversight, and evaluation. Performance measures from LWIAs will be evaluated quarterly, to determine the impact of the waiver approval. The state will gather information through discussion on the progress of the implementation of the waiver, performance data, and obstacles encountered, if any. The state will review applicable policies and procedures and modify them accordingly.

United States Department of Labor, Employment and Training Administration: WIA/W-P Waiver Request Form
Last updated 8-19-2011
OMB Number 1205-0398

Subject: Required Evaluations of Workforce Investment Act Programs
Date: October 25, 2012
State: Commonwealth of Pennsylvania
Agency: PA Department of Labor and Industry (L&I)

Statutory and/or regulatory requirements to be waived:
Waiver of WIA Section 134(a)(2)(B)(ii); WIA Section 136(e) and 20 CFR 665.200(d) requiring the conduct of evaluations of workforce investment activities for adults, dislocated workers, and youth.

Actions undertaken to remove state or local barriers: There are no state or local barriers.

Goals and expected programmatic outcomes of waiver:
The reduction to five percent in the WIA allotment for Program Year 2012 Governor's Reserve funds restricts the commonwealth's ability to effectively fund and carry out all of the required statewide workforce investment activities. The current funding level in the Governor's Reserve is insufficient to cover the cost of evaluations of WIA programs.

The commonwealth's reduced funds are being used to cover all other applicable required activities per WIA Section 134(a)(2); and 20 CFR 665.200.

Pennsylvania's goal in seeking this waiver is to ensure that the commonwealth may prioritize the use of Governor's Reserve funds for the required activities deemed most essential to the basic functions of the workforce investment system. Approval of the waiver will allow funds to be made available for local areas to serve additional WIA participants.

Individuals impacted by the waiver:
This waiver will provide the state agency with more flexibility in directing Governor's Reserve funds to those activities that best preserve basic functions of the statewide workforce investment system. Performance data is currently captured and analyzed to determine the effectiveness of Pennsylvania's workforce investment system.

Process for monitoring progress in implementation:
The commonwealth will monitor progress and ensure accountability for federal funds in connection with these waivers by reviewing monthly expenditure, performance, and other reports; contacting the ETA Regional Office liaisons regularly; and using its monitoring and performance accountability system.

Notice to affected local boards:
The proposed waiver request has been posted to the commonwealth's official website for one week. Concurrently, notification of the posting has been emailed to the commonwealth's 22 local board chairs; executive directors have been copied.

Public comment:
The proposed waiver request has been posted to the commonwealth's official website for one week. Any comments or concerns collected due to the posting, along with the commonwealth's review of the public comments received, have been addressed and included in the plan.

United States Department of Labor, Employment and Training Administration: WIA/W-P Waiver Request Form
Last updated 8-19-2011
OMB Number 1205-0398

Subject: **Provision of Incentive Grants to Local Workforce Investment Areas**
Date: **October 25, 2012**
State: **Commonwealth of Pennsylvania**
Agency: **PA Department of Labor and Industry (L&I)**

Statutory and/or regulatory requirements to be waived:
Waiver of WIA Section 134(a)(2)(B)(iii) and 20 CFR 665.200(e) requiring provision of incentive grants to local areas.

Actions undertaken to remove state or local barriers: There are no state or local barriers.

Goals and expected programmatic outcomes of waiver:

The reduction to five percent in the WIA allotment for Program Year 2012 Governor's Reserve funds restricts the commonwealth's ability to effectively fund and carry out all of the required statewide workforce investment activities. The current funding level in the Governor's Reserve is insufficient to cover the cost of incentive grants to local areas.

The commonwealth's reduced funds are being used to cover all other applicable required activities essential to WIA administration and programs per WIA Section 134(a)(2) and 20 CFR 665.200.

Our goal in seeking this waiver is to ensure that the commonwealth may prioritize the use of Governor's Reserve funds for the required activities deemed most essential to the basic functions of the workforce investment system.

Individuals impacted by the waiver:
The waiving of WIA Section 134(a)(2)(B)(iii) and 20 CFR 665.200(e) requiring provision of incentive grants to local areas will have a negative impact on local areas that have achieved exemplary performance; it is noted that this waiver will provide the state agency with more flexibility in directing Governor's Reserve funds to those activities that best preserve basic functions of the statewide workforce investment system.

Process for monitoring progress in implementation:
The commonwealth will monitor progress and ensure accountability for federal funds in connection with these waivers by reviewing monthly expenditure, performance, and other reports; contacting the ETA Regional Office liaisons regularly; and using its monitoring and performance accountability system.

Notice to affected local boards:
The proposed waiver request has been posted to the commonwealth's official website for one week. Concurrently, notification of the posting has been emailed to the commonwealth's 22 local board chairs; executive directors have been copied.

Public comment:
The proposed waiver request has been posted to the commonwealth's official website for one week. Any comments or concerns collected due to the posting, along with the commonwealth's review of the public comments received, has been submitted with the plan.

United States Department of Labor, Employment and Training Administration: WIA/W-P Waiver Request Form
Last updated 8-19-2011
OMB Number 1205-0398

Subject: **On-the-Job Training (OJT) Reimbursement Waiver Request**
Date: **July 1, 2012**
State: **Commonwealth of Pennsylvania**
Agency: **PA Department of Labor & Industry (L&I)**

Statutory and/or regulatory requirements to be waived:
Waiver of WIA Section 101(31)(B) and 20 CFR 663.710(b), which reimburses employers up to 50 percent of the wage rate for extraordinary costs of providing training and additional supervision when providing OJT opportunity to a WIA participant.

This waiver request will allow the commonwealth to reimburse employers up to 90 percent based on either of the following conditions:

- Employer size: (1) up to 90 percent of the participant's wage rate for employers with 50 or fewer employees; or (2) up to 75 percent of the participant's wage rate for employers with 51-250 employees. Employers with more than 250 employees are limited to the standard WIA cap of 50 percent. *

- Participant Skills Gap: Where there is an extraordinarily large gap between the skills of the individual and the skills required for the job, a sliding scale up to 90 percent may be used to reflect the degree of the individual participant's skills gap. Note: The commonwealth will allow up to 90 percent of the participant's wage rate in those cases where the skills gap analysis indicates that a participant has none of the required skills in 80 to 100 percent of the skill areas being analyzed. Up to 75 percent of the participant's wage rate is to be reimbursed when the participant's skills gap analysis indicates that the participant has none of the required skills in 60 to 79 percent of the skill areas being analyzed. The standard WIA cap of 50 percent will be used for all others. *

(*) Priority Populations: Where the reimbursement level is less than 90 percent, an additional 10 percent reimbursement may be offered to incentivize training for participants who are long-term unemployed as defined in Pennsylvania's Integrated Workforce Plan (Program Years 2012-2016); veterans; ex-offenders; displaced homemakers; low-income individuals, such as those receiving public assistance: migrant and seasonal farm workers: and/or individuals with multiple barriers to employment, including older individuals, persons with limited English proficiency, and persons with disabilities.

Wage Cap: Employers may pay participant's wages that are higher than Pennsylvania's average wage at the time of enrollment into OJT; however, reimbursement shall not exceed 90 percent of the state average wage. The state average wage must be documented in the training plan for monitoring purposes.

Dual Enrollment with Trade Adjustment Act Participants: Dislocated workers may be eligible under the WIA and the Trade Adjustment Act of 1974, as amended; this is especially true for participants in certain National Emergency Grants (NEG). For these participants, Trade Act funds must be used first, up to 50 percent of the wage, and supplemented by WIA/NEG funds up to the allowable wage match rate.

OJT Duration Limit: Because resources are limited, the period of reimbursement applying this waiver will be limited to six (6) months to maximize opportunity. Employers who require less time to train OJT participants should be encouraged to transition participants to permanent employment as soon as possible. The length of an OJT is determined in accordance with 20 CFR 663.700(c). For participants dually enrolled under the Trade Act, the length of the OJT depends on the training plan approved by the state. No reimbursement greater than 50 percent will remain in effect longer than six months.

Actions undertaken to remove state or local barriers: There are no state or local statutory or regulatory barriers to impede implementation of this waiver.

Goals and expected programmatic outcomes of waiver:

- Increased number of employers using OJT as a means to hire/retain a skilled workforce
- Increased number and percentages of workers trained and hired through OJT programs
- Elevated skill proficiencies and improved marketability for workers
- Increased responsiveness to labor market issues in the private sector
- Increased flexibility at the local level to offer training solutions tailored to employers' needs
- Reinvigorated local economies when small businesses that are the engine of economic growth are incentivized to hire workers and expand their operations.

Individuals impacted by the waiver:

- Employers, by allowing for more rapid adaptation to changes in technology and the global marketplace and greater capabilities to expand their business and remain competitive.

- Adults, out-of-school youth and dislocated workers who are eligible for services under WIA and the Trade Adjustment Act. Eligible individuals most likely to benefit are those who have multiple barriers to employment, low basic skills or limited English language proficiency.

Process for monitoring progress in implementation:

- Information about successful OJT programs has been shared and discussed at various workforce development forums providing a robust exchange of ideas, resources, and experiences. *Effective On the Job Training Practices, Lessons Learned from the PA NEG OJT Project Report* has been disseminated to LWIA staff. The report provides information and resources that can be used to replicate successful OJT programs.

- L&I is the state administrative entity for the Workforce Investment Act. L&I will monitor the progress and implementation of this waiver through a combination of the Local Plan review and approval process, discussions and presentations at workforce development

forums, sharing of proven strategies and resources, local performance reports, and state oversight and evaluation.

- Performance measures for local implementers will be reviewed monthly to determine the impact of the waiver. The commonwealth will gather information on the progress of the implementation, performance data, and obstacles encountered, if any through review and discussion.

To ensure fiscal integrity, there will be both adequate oversight and complete, monthly reporting. . The commonwealth's *OJT NEG Monitoring Tool* and *Oversight Desk Monitoring Tool* will be modified to address any changes needed as a result of waiver approval. Policies and procedures will be reviewed and modified accordingly.

United States Department of Labor, Employment and Training Administration: WIA/W-P Waiver Request Form
Last updated 8-19-2011
OMB Number 1205-0398

Subject: Allow ITAs for Out-of-School Youth
Date: August 31, 2012
State: Commonwealth of Pennsylvania
Agency: PA Department of Labor and Industry (L&I)

Statutory and/or regulatory requirements to be waived:
Waiver of WIA Section Sec. 122, Sec 123, Sec 129(c)(2)&(3)(A)(ii) and 20 CFR 664.510, which prohibits the use of Individual Training Accounts (ITAs) for youth participants, unless served under the adult or dislocated worker programs.

The WIA statute at Section 129 does not provide youth access to ITAs. The WIA Final Regulations at Sec. 664.510 specifically prohibits the use of youth funds to support ITAs for Out-of-School Youth (OSY) with youth funding.

Under WIA, the focus of youth programs has changed from the provision of short-term, stand alone programs to providing year-round, long-term services designed to assist both in-school and OSY in making the transition to postsecondary training and careers. The commonwealth believes that the intent of this regulation is appropriate; however, contracted year-round youth programs are the best and only training vehicle for certain individuals within Pennsylvania's OSY population. OSY continue to be one of the most difficult populations to serve because their interest often lies in obtaining self sufficient, full-time employment rather than being involved in a typical structured setting that youth contracts provide. Utilization of service elements through year-round contracting, too often results in delaying OSY's access to training and subsequent employment. In addition, the real-life informed decision-making involved in using ITAs and the Eligible Training Program Provider (ETPP) list would provide OSY with the experience of responsibility so necessary as an adult.

LWIAs currently have the option to dual-enroll eligible individuals in youth and adult services, which allows OSY to access ITAs. Such dual enrollment solely for the purpose of allowing OSY access to ITAs, however, restricts local flexibility to manage limited resources. The option to allow OSY to access ITAs and the ETPP process using youth funds and consequently, retain adult funds to provide adult services, enhances local flexibility, which is one of the seven key principles of the WIA. The option for dual enrollment into youth and adult services would still be an option if the LWIA determines it to be appropriate, based on available resources and the needs of the individual.

WIA requires that LWIAs make available a menu of ten program elements, specified at 20 CFR 664.410, to eligible youth. The commonwealth believes that the intent of this regulation is to provide service delivery options that will ensure successful outcomes for OSY. Waiver approval provides another means to assist OSY in meeting their career objectives.

Implementation will be monitored through the local planning process. LWIAs are required to strategies and operational procedures for waiver implementation to ensure compliance with the regulations for payment of training services through an ITA. This waiver will not circumvent the OSY requirements of WIA, but bring service delivery for youth closer to the intent of the Act, while serving customers according to their individual needs.

Actions undertaken to remove state or local barriers: There are no state or local barriers.

Goals and expected programmatic outcomes of waiver:

- Ensures that LWIAs have the flexibility to design and deliver programs based on the needs of their customers, rather than restrictions based solely on age.
- Reduces the paperwork/tracking processes requirement in dual enrollment (OSY and Adult)
- Offers youth the real-life learning experience of making an informed decision that has direct impact on his/her life. Using the ITA/ETPP process with OSY offers case managers the opportunity to discuss the process of decision-making (training provider, finances, etc) and the results that ensue.
- Provides for and promotes customer choice and brings market forces into play.
- Maximizes local flexibility based on youth customers' assessed needs in terms of training that leads to self-sufficiency in demand occupations.
- Provides OSY Youth more choice by opening up the Adult ETPP.
- Allows for use of Youth funds instead of Adult funds for ITAs as part of the 30 percent OSY expenditure requirement.

Individuals impacted by the waiver:
The waiver can positively impact all out-of-school WIA eligible youth. These customers will receive the type of services that most closely and quickly meet their needs without unnecessary paperwork and tracking.

Process for monitoring progress in implementation:
L&I is the state administrative entity for WIA. The waiver enables Pennsylvania the flexibility to design seamless delivery of services and to customize the education and training programs for youth. With an emphasis on furthering customer satisfaction through choice, individual opportunity, and continuity of services, each LWIA can ensure an efficient and quality delivery system. L&I will monitor the implementation and impact of the waiver, through a combination of reporting from the local level, state oversight, and evaluation. Performance measures from the workforce regions will be reviewed quarterly, to determine the impact of the waiver approval. The state will gather information through discussion on the progress of the implementation of the waivers, performance data, and obstacles encountered, if any. To ensure fiscal integrity, there will be both adequate oversight and complete, consistent reporting. The commonwealth will review applicable policies and procedures and modify them accordingly.

Appendix P – Local and Regional Workforce Investment Area Designations

Local Workforce Investment Areas were recommended to the governor by the State WIB in a two-phase process. The Local Workforce Investment Areas were designated in April 1999 and there have been no changes since that time.

1. Identification of Local Workforce Investment Areas

The Commonwealth of Pennsylvania has designated 23 Local Workforce Investment Areas. Following is a list of Local Workforce Investment Areas designated in Pennsylvania and the counties comprising the designated LWIAs. Five of PA's LWIAs qualified under WIA's provisions for automatic designation. Of the remaining 18 LWIAs, 13 were established as multi-county LWIAs. PA consolidated 28 JTPA SDAs into 23 LWIAs.

- Allegheny County Workforce Investment Area
- Berks County Workforce Investment Area
- Bucks County Workforce Investment Area
- Central Workforce Investment Area - consisting of the Counties of Mifflin, Snyder, Union, Centre, Clinton, Lycoming, Columbia, Northumberland, and Montour
- Chester County Workforce Investment Area
- Delaware County Workforce Investment Area
- Lackawanna County Workforce Investment Area
- Lancaster County Workforce Investment Area
- Lehigh Valley Workforce Investment Area - consisting of Lehigh and Northampton Counties
- Luzerne-Schuylkill Counties Workforce Investment Area - consisting of the Counties of Luzerne and Schuylkill
- Montgomery County Workforce Investment Area
- North Central Workforce Investment Area - consisting of McKean, Potter, Elk, Cameron, Jefferson, and Clearfield Counties
- Northern Tier Workforce Investment Area - consisting of Tioga, Bradford, Susquehanna, Sullivan, and Wyoming Counties
- Northwest Workforce Investment Area - consisting of the Counties of Erie, Crawford, Warren, Venango, Forest, and Clarion
- Philadelphia Workforce Investment Area
- Pocono Counties Workforce Investment Area - consisting of the Counties of Carbon, Monroe, Pike and Wayne
- South Central Workforce Investment Area - consisting of the Counties of Dauphin, Lebanon, Perry, Cumberland, Juniata, Franklin, Adams, and York
- Southern Alleghenies Workforce Investment Area - consisting of Cambria, Blair, Huntingdon, Somerset, Bedford, and Fulton Counties

- Southwest Corner Workforce Investment Area - consisting of the Counties of Beaver, Washington, and Greene
- The City of Pittsburgh Workforce Investment Area
- Tri-County Workforce Investment Area - consisting of the Counties of Indiana, Butler, and Armstrong
- West Central Workforce Investment Area - consisting of the Counties of Mercer and Lawrence
- Westmoreland-Fayette Workforce Investment Area - consisting of the Counties of Westmoreland and Fayette

2. Local Workforce Investment Area Designation Process

Input into the Local Workforce Investment Area Designation Process was solicited from LEOs in October 1998. LEOs were asked to assess the needs of each respective county, section 116 of the WIA, and the PA CareerLink® service delivery system being developed in their counties, before submitting their LWIA Designation Request Forms. Multiple factors were taken into consideration in determining LWIA designations, including:

- labor market areas;
- educational system Intermediate Unit structure;
- educational information such as secondary school dropout rates and postsecondary institutions within a LWIA;
- population mobility and resident relocation tendencies;
- economic profiles and employment by occupations that included the top twenty industry groups within the LWIA, and similarities to neighboring Areas;
- economic development regions;
- transportation infrastructure in the LWIA;
- commuter patterns of LWIA residents commuting to work with respect to average commuting times; and
- the effects that the elimination of hold-harmless provisions and reduced administrative funding levels of the prior authorizing legislation, the JTPA, would have on the LWIA under the WIA.

3. Local Workforce Investment Area Designation Appeals Process

A unit of general local government (including a combination of such units), or grant recipient that requests but is not granted designation of an area as a LWIA under section 116(a) paragraph (2) or (3) of the Act, may submit an appeal to the US Department of Labor & Industry, which shall act on the behalf of the PA WIB under the appeal process established in the Strategic State Workforce Investment Plan as described below.

a. Appeal to the Pennsylvania Workforce Investment Board (PA WIB)

Following receipt of notification that request for designation has not been granted, the entity has twenty (20) days from the date of the notification to submit an appeal. This request should be submitted to the PA WIB. The appeal should include all factual and legal arguments as to why the appeal should be granted. The Deputy Secretary conducts a review of the appeal and issue a decision within thirty (30) days from the date of receipt of the appeal. The designation process continues while the appeal is in progress, and is modified should the initial denial of designation be overturned. If a formal decision is not issued by the Deputy Secretary to the originator of the appeal within sixty (60) days of receipt of the appeal, the original designation decision is considered to have been upheld.

b. Appeal to the United States Department of Labor

If the appeal of the decision submitted within the required timeframe does not result in the requested designation, the unit or grant recipient may appeal the designation decision to the U.S. Secretary of Labor. The appeal to the Secretary must be consistent with the requirements of the WIA of 1998. The U.S. Secretary of Labor, after receiving a request for review from the unit or grant recipient and on determining that the unit or grant recipient was not accorded procedural rights under the appeal process established in the Strategic State Workforce Investment plan, or that the area meets the requirements of WIA section 116(a) (2) or (3), as appropriate, may require that the area be designated as a LWIA under such appropriate paragraph.

4. Designation of Intrastate and Interstate Regions

Intrastate Regions

Ten regions across the state have been designated for economic development planning purposes. These regions have served as a vehicle for workforce development planning as well. However, LWIAs have developed partnerships reflecting other regional labor market conditions. As an example, the Northwest Manufacturing Industrial Partnership is a collaborative effort involving three LWIAs and fourteen Pennsylvania counties. Such collaborations are transforming local economies by leveraging public and private sector resources to develop effective strategies to meet the demands of global competition.

During the past 8 years, targeted industry clusters have been essential to the direction of all workforce development strategies in Pennsylvania. An industry cluster consists of a group of industries that are closely linked by common product markets, labor pools, similar technologies, supplier chains, and /or other economic ties.

By creating an industry-driven workforce development system, these clusters have helped align training and training providers' offerings to the private sector's needs, and created a culture

where employers, often competitors, work together to ensure their employees have the skills necessary for them to be successful in the workplace.

The targeted industry clusters, most often cross the boundaries of the ten economic development regions and twenty-three Local Workforce Investment Areas (LWIAs). To support these efforts the Pennsylvania legislature amended the Workforce Development Act to establish Industry Partnership programs, in which employers and workers from vital industries will cooperate to collectively improve their competitive position in the marketplace.

Industry partnerships identify specific training needs and skill gaps, help connect young people to careers, help educational and training institutions arrange curriculum to meet business demands, address worker recruitment and retention, develop career ladders within companies, highlight best practices, and promote communication among companies.

Interstate Regions

In Pennsylvania, LWIAs and neighboring states regularly collaborate to serve customers or industry sectors of mutual interest, particularly with regard to National Emergency Grant projects involving significant dislocations. Economic growth and high wage jobs have been the result of LWIAs working together to provide workforce development solutions to targeted industries.

In 2007, The Delaware Valley Innovation Network (DVIN) was formed to apply for a Workforce Innovation in Regional Economic Development (WIRED) grant from the United States Department of Labor to support worker training and talent development within the life sciences and its supporting industries. The DVIN was a regional collaborative partnership amongst government, academia, industry, and economic and workforce development organizations that served 14-counties within three states including New Castle county in Delaware; Burlington, Camden, Cumberland, Gloucester, Mercer and Salem counties in New Jersey; and Berks, Bucks, Chester, Delaware, Lancaster, Montgomery and Philadelphia counties in Pennsylvania. The DVIN project was focused on expanding the economic capacity of the region's Life Sciences industry cluster and enhancing its competitive position, both nationally and globally.

Although the work of the DVIN has been completed the interstate partnership continues building collaborative strategies to enhance the skills of the labor force and increase the economic competitiveness of the Greater Philadelphia Area.

On January 31, 2008, the U.S. Department of Labor (USDOL) announced a $250,000 Regional Innovation Grant (RIG) to assist Pennsylvania and Ohio economic development collaboration to advance economic and talent development strategies in a contiguous five-county area straddling both states.

In January 2009, the governors of Pennsylvania and Ohio jointly designated a contiguous five-county area straddling both states as the OH-PENN Interstate Region, the first interstate workforce region in the nation. By making this an official region created under the authority of the Workforce Investment Act and a joint state and local initiative, the designation recognized the economic and demographic characteristics shared by the counties and the need to maximize workforce development in the overall region. The region includes the Pennsylvania counties of Lawrence and Mercer and the Ohio counties of Mahoning, Columbiana and Trumbull. The workforce investment boards associated with the five counties are the Mahoning and Columbiana Training Association and the Trumbull County Workforce Investment Boards in Ohio and the West Central Job Partnership in Pennsylvania.

The grant helped to establish a leadership committee to facilitate a sustainable and collaborative approach to further develop the region's workforce for key business sectors and to spur economic growth. The leadership committee worked with representatives of economic and workforce development agencies; chambers of commerce; educational institutions; and business, governmental and community leaders from throughout the five counties.

The Regional Implementation Plan was developed during a summit that included key stakeholders from each area for the creation of an OH-PENN Competitiveness Council to coordinate workforce development activities with the economic and education sectors operating in the area. The Competitiveness Council outlined a governance structure, goals matrix, and plans for hosting and staffing the council, so stakeholders could easily organize for continued regional development.

The OH-PENN partners work collaboratively on the design and development of comprehensive and strategic regional plans focused on talent development that is aligned with the demands of the 21st-century economy. Strategies have been implemented to promote economic growth through development of a highly skilled workforce. Project goals continue to include the development of systems and furthering the coordination of activities to enable an integrated and flexible response to workers impacted by major dislocations and to link educational opportunities with economic development opportunities in the region.

Today the OH-PENN partners are leveraging resources, sharing best practices, and collectively providing services to businesses and job seekers. The partners have replicated a successful Business Resource Network model to increase communication and target responses to the training, recruitment and human capital needs of businesses in the region.

The WorkKeys® assessment system has been selected by the OH-PENN partners to provide job seekers with credentials exhibiting levels of achievement of skills necessary in today's workplace.

Rapid Response has been coordinated, improving services to both businesses and job seekers. Coordinated efforts have increased the appeal and effectiveness of each of the individual

workforce investment areas by eliminating duplication while expanding recognition, community involvement and available resources. Efforts have also increased the array and quality of services available to facilitate the creation of a skilled workforce that is equipped to use 21st-century technology and created a business environment that is not focused on surviving but on thriving in the global economy. The TechBelt Initiative will reinvigorate the Cleveland-to-Pittsburgh region by creating of new products, technologies, and companies.

The commonwealth continues to encourage regional planning efforts to build economic and workforce development strategies relevant to the industries and resources located in geographical areas shared by multiple economic or workforce development areas.

DEPARTMENT OF LABOR AND INDUSTRY

OR-14-002
February 11, 2014

SECRETARY

Boards

- Accessibility Advisory Board
- Boiler Advisory Board
- Community Service Advisory Board
- Elevator Advisory Board
- Fire and Panic Advisory Board
- Liquified Petroleum Gas Advisory Board
- Prevailing Wage Advisory Board
- Prevailing Wage Appeals Board
- State Board of Vocational Rehabilitation
- State Workers' Insurance Board

Councils/Committees

- Advisory Council for the Deaf and Hard of Hearing
- State Advisory Council on Unemployment Compensation
- Advisory Council to the State Workers' Insurance Board
- Asbestos Control Advisory Committee
- Employment Agency Advisory Council
- Governor's Committee on the Employment of People with Disabilities
- Pennsylvania Rehabilitation Council
- State Apprenticeship and Training Council
- State Independent Living Council to the Pennsylvania Office of Vocational Rehabilitation
- Workers' Compensation Advisory Council
- Advisory Committee for the Blind
- Committee of Blind Vendors

Inspector General

Office of General Counsel
Chief Counsel

Office of the Budget
Comptroller

Industrial Board
Unemployment Compensation (UC) Board of Review
Pennsylvania Workforce Investment Board

Executive Deputy Secretary L&I

Governor's Policy Office

Office of Policy, Planning, and Development

Integrity Office
Division:
Internal Audits

Financial Management Office
Divisions:
Cost Model
Budget

Legislative Affairs

Press Office

Pennsylvania Labor Relations Board
Workers' Compensation Appeal Board

Deputy Secretary for Administration

Office of Information Technology

Bureau of Infrastructure and Operations
Divisions:
- Infrastructure
- Server Farm Operations
- Disability Determination Support Services
- Network Support Services

Bureau of Business Application Development
Divisions:
- Unemployment Compensation
- Workers' Compensation and Disability Determination
- SWIF
- Workforce Development
- Vocational Rehabilitation, Safety and Labor/Management Relations

Bureau of Enterprise Services
Divisions:
- Project Management
- Customer Relations
- Business Center of Excellence
- Security

Bureau of Enterprise Architecture
Divisions:
- Engineering and Research
- Standards Development and Compliance
- Data Management and Database Operations

Bureau of Human Resources
Divisions:
- Employee Benefits, Safety, and Health
- Employee Development and Organizational Performance
- Labor Relations
- Staffing Services

PENNSERVE

Office of Equal Opportunity

Bureau of Administrative Services
Divisions:
- Procurement, Contracts and Property Management
- Management Services

Deputy Secretary for Unemployment Compensation Programs

Office of Unemployment Compensation Tax Services
Divisions:
- Administrative and Program Support
- Central Operations
- Field Accounting Service

Regional Offices
County Offices

Office of Unemployment Compensation Benefits Policy
Divisions:
- Unemployment Compensation Policy
- Unemployment Compensation Operations and Quality Assurance

Office of Unemployment Compensation Service Centers
Divisions:
- Field Operations
- Unemployment Compensation Support Operations

Deputy Secretary for Compensation and Insurance

State Workers' Insurance Fund
Divisions:
- Claims Services
- Underwriting
- Financial Management

Bureau of Workers' Compensation
Divisions:
- Administrative Support
- Claims Management
- Health Care Services Review
- Self-Insurance
- Health and Safety

Workers' Compensation Office of Adjudication
Regional Offices

Deputy Secretary for Workforce Development

Center for Workforce Information and Analysis
Divisions:
- Outreach and Training
- Employers, Industry and UI
- Research, Development, Special Studies, and Customer Service

Bureau of Workforce Partnership and Operations
Divisions:
- Quality Assurance
- State Operations
- Field Operations

Regional Offices
Career Links

Bureau of Workforce Development Administration
Division:
- Grants and Fiscal Services

Executive Director, Office of Vocational Rehabilitation

Hiram G. Andrews Center (HGAC)
Divisions:
- Allied Health Services
- Education
- Maintenance
- Business
- Student Services

Bureau of Central Operations
Divisions:
- Budget, Grants and Administrative Services
- Employer Services & Staff Development
- Policy, Planning & Evaluation
- Special Programs

Bureau of Vocational Rehabilitation Services
District Offices
Program Support

Bureau of Blindness and Visual Services

Office for the Deaf and Hard of Hearing

Deputy Secretary for Safety and Labor-Management Relations

Labor Management Cooperation Office

Bureau of Mediation
Regional Offices

Bureau of Labor Law Compliance
Field Offices

Bureau of Occupational and Industrial Safety
Divisions:
- Administrative
- Uniform Construction Code (UCC)
- UCC Plan Review
- UCC Inspection
- Boiler
- Elevator
- Certification
- Accreditation and Licensing

Bureau of Disability Determination
Branch Offices

O.E.O. – ORGANIZATION CHART

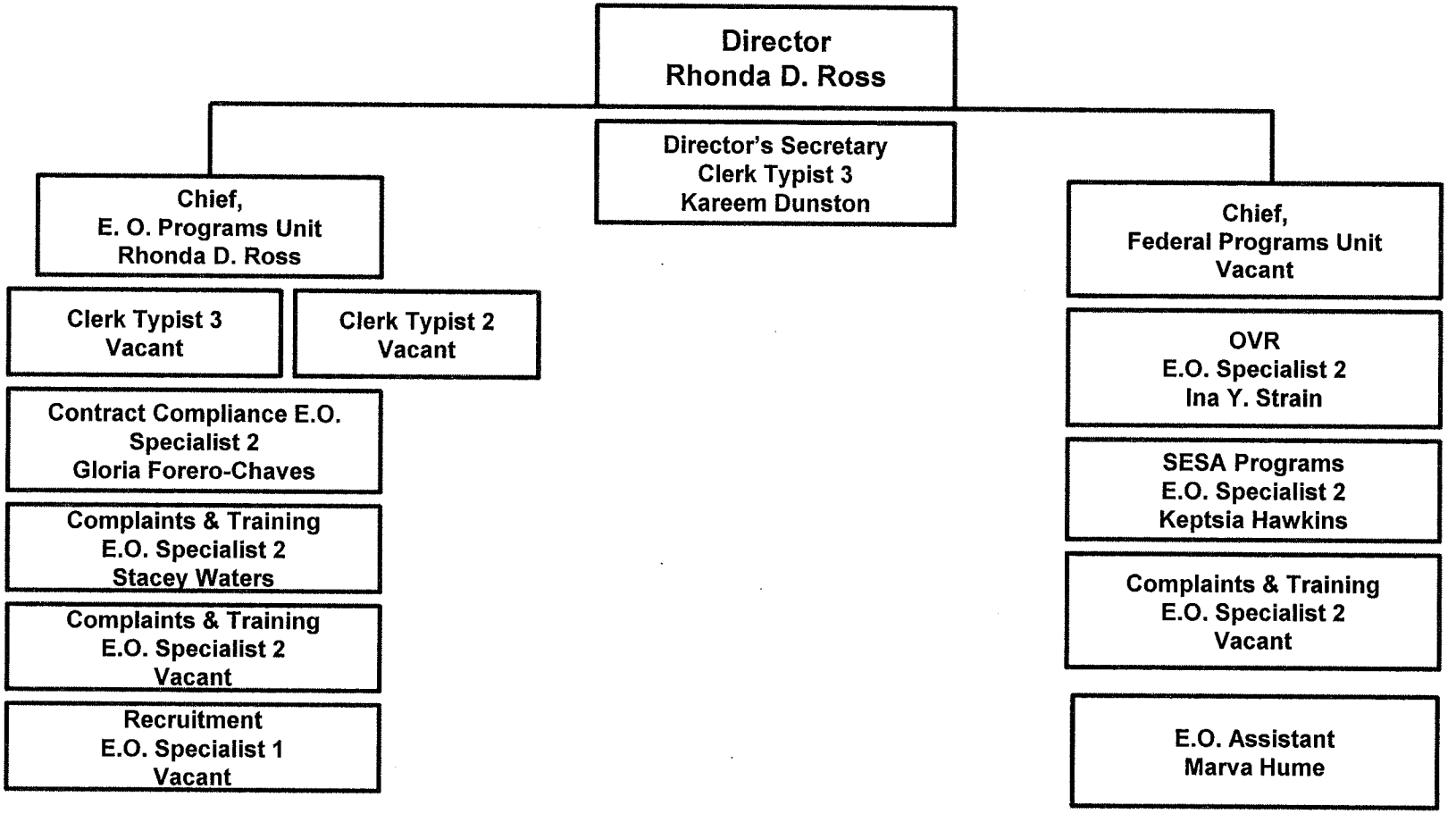

pennsylvania
DEPARTMENT OF LABOR & INDUSTRY

pennsylvania
DEPARTMENT OF LABOR & INDUSTRY
THE SECRETARY

DATE: **February 28, 2014**

SUBJECT: Workforce Investment Act Equal Opportunity Policy Statement

TO: All Labor & Industry Employees

FROM: Julia K. Hearthway
Secretary

The Department of Labor & Industry (department) has been designated by the Governor to coordinate the implementation of the Workforce Investment Act (WIA) and State Employment Security Agencies (SESA) activities for the Commonwealth of Pennsylvania.

Our major responsibility is to ensure that equal opportunity, as enshrined in the United States Constitution, is available to all citizens of the commonwealth.

According to federal regulations for "Implementation of the Nondiscrimination and Equal Opportunity Provisions of the Workforce Investment Act of 1998 Requirements" (29 CFR §§ 37.1-37.115) for federally funded or assisted programs, SESA and WIA programs are prohibited from discriminating on the grounds of race, color, religion, sex, national origin, age, disability, political affiliation or belief, or against any beneficiary of programs financially assisted under Title I Section 188 of the WIA, on the basis of the beneficiary's citizenship/status as a lawfully admitted immigrant authorized to work in the United States, or his or her participation in any WIA Title I financially assisted program or activity. It is, therefore, the policy of the department to promote the underlying principles of equality and to vigorously and conscientiously enforce the nondiscrimination and equal opportunity laws by which WIA and SESA are governed.

This policy statement reaffirms the department's position that Local Workforce Investment Area (LWIA), SESA, or other WIA-funded or assisted programs are prohibited from discriminating against applicants, eligible applicants, claimants for employment, employees and members of the public. In addition, discrimination is prohibited against individuals with disabilities, vision or hearing impairments, and individuals with limited or no English speaking proficiency in admission or access to, opportunity or treatment in, employment in the administration of, or in connection with any WIA/SESA program or activity.

If you believe you have been subjected to discrimination in a WIA/SESA program or activity, you may file a complaint within 90 days from the date of the alleged violation with the Office of Equal Opportunity, Pennsylvania Department of Labor & Industry, 651 Boas Street, Room1402, Harrisburg, Pennsylvania, 17121 or telephone: 800.622.5422 or 717.787.1182 or PA Relay: 711.

Complaints may also be filed with the Director, Civil Rights Center, U.S. Department of Labor, 200 Constitution Avenue, NW, Room N-4123, Washington, DC 20210.

pennsylvania
DEPARTMENT OF LABOR & INDUSTRY
THE SECRETARY

DATE: **February 28, 2014**

SUBJECT: Policy on Sexual Harassment

TO: All Labor & Industry Employees

FROM: Julia K. Hearthway
Secretary

I would like to take this opportunity to affirm my commitment to support and reinforce the commonwealth's policy relative to the prohibition of sexual harassment in the workplace.

As the responsible official for the Department of Labor & Industry (department), I will not tolerate sexual harassment by any employee against another employee, applicant for employment, client of or any person conducting business with or receiving services from the department, or any representative thereof.

Examples of acts of sexual harassment that shall not be tolerated include, but are not limited to the following, particularly when they are repeated or part of a general pattern of behavior:

Written: Unwelcome suggestive, sexually explicit, or obscene letters, poems, notes or invitations.

Verbal: Derogatory, sexually explicit, or offensive comments, epithets, slurs or jokes; inappropriate comments about an individual's body or sexual activities; repeated unwelcome propositions or repeated sexual flirtations; direct or subtle pressures or repeated unwelcome requests for dates or sexual activities.

Physical: Impeding or blocking movements, touching, patting, pinching or any other unnecessary or unwanted physical contact.

Visual: Sexually oriented gestures, display of sexually suggestive or derogatory objects, pictures, cartoons, posters or drawings.

If you believe you have been the victim of sexual harassment in any form by any manager, supervisor, co-worker, customer, client or any other person in connection with your employment, you should immediately notify your supervisor or someone in the direct line of supervision. If you feel uncomfortable, for any reason, discussing such matters with the supervisor and/or others in the direct line of supervision, or you are not satisfied after raising the matter with such individuals, you may contact:

Ms. Rhonda D. Ross, Acting Director
Office of Equal Opportunity
Pennsylvania Department of Labor & Industry
651 Boas Street, Room 1402
Harrisburg, PA 17121
Telephone: 800.622.5422 or 717.787.1182
Email: rross@pa.gov
PA Relay Service: 711

You also have the option of filing a complaint with the following agencies outside the Department:

PENNSYLVANIA HUMAN RELATIONS COMMISSION
(Within 180 Days of Alleged Occurrence)

Harrisburg Regional Office
333 Market Street, 8th Floor
Harrisburg, PA 17126-0333
717.787.9780 (Voice)
717.787.7279 (TTY)

Philadelphia Regional Office
State Office Building
110 North 8th Street, Suite 501
Philadelphia, PA 19107
215.560.2496 (Voice)
215.560.3599 (TTY)

Pittsburgh Regional Office
301 Fifth Avenue
Piatt Place, 3rd Fl. Suite 390
Pittsburgh, PA 15222-1210
412.565.5395 (Voice)
412.565.5711 (TTY)

EQUAL EMPLOYMENT OPPORTUNITY COMMISSION
(Within 300 Days of Alleged Occurrence)

Philadelphia District Office
Penthouse - Suite 1300
801 Market Street
Philadelphia, PA 19107-3127
215.440.2600 (Local)
800.669.4000 (Voice)
215.440.2610 (TTY)

Pittsburgh District Office
William S. Moorhead Federal Building
1000 Liberty Ave., Suite, 1112
Pittsburgh, PA 15222-4178
412.664.2728 (Local)
800.669.4000 (Voice)
412.395.5904 (TTY)

Retaliation in any form against an employee, applicant for employment, client or person conducting business with or receiving services from the department who exercises his or her right to make a good faith complaint under this policy, or who cooperates in an investigation of any complaint is strictly prohibited. Any retaliatory action will itself be cause for appropriate disciplinary action.

Managers and supervisors are to ensure that every department employee is provided with a copy of *Executive Order 2002-4* and this policy. Each employee is to read the documents and sign a copy of Enclosure 1, Acknowledgment of Receipt of the Commonwealth of Pennsylvania's Sexual Harassment Policy. Signed copies of the form contained in Enclosure 1 are to be maintained in the employee's Official Personnel Folder (STD-301).
The form may be photocopied and provided to employees for signature. Managers should send the signed forms to:

Mr. Mark A. Grab, Director
Pennsylvania Department of Labor & Industry
Bureau of Human Resources
Labor & Industry Building
651 Boas Street, Room 1415
Harrisburg, PA 17121

If you have any questions or need additional assistance obtaining a copy of the Executive Order or Management Directive, please contact Ms. Rhonda D. Ross, Acting Director of the Office of Equal Opportunity at 717.787.1182.

ACKNOWLEDGMENT OF RECEIPT OF THE COMMONWEALTH OF PENNSYLVANIA'S SEXUAL HARASSMENT POLICY

I acknowledge that I have received and reviewed copies of the Commonwealth of Pennsylvania's policy on sexual harassment which is set forth in *Executive Order 2002-4, Prohibition of Sexual Harassment in the Commonwealth,* and *Management Directive 505.30, Prohibition of Sexual Harassment in Commonwealth Work Settings.*

NAME (PRINT): _____

SIGNATURE: _____

DATE: _____

AGENCY: _____

Note: This form is to be maintained in my Official Personnel Folder (STD-301) by the agency Human Resource Office.

pennsylvania
DEPARTMENT OF LABOR & INDUSTRY
THE SECRETARY

DATE: **February 28, 2014**

SUBJECT: Equal Employment Opportunity Policy Statement

TO: All Labor & Industry Employees

FROM: Julia K. Hearthway
Secretary

PURPOSE

To reaffirm the policy of the Department of Labor & Industry (department) to establish and maintain an open and equitable personnel system for all job applicants and employees in accordance with federal and state laws.

It is the position of the department that discrimination is a form of misconduct that undermines the integrity of an employment relationship. Such behavior may result in disciplinary action up to and including dismissal.

COVERAGE

All employees and job applicants.

LEGAL DEFINITIONS AND GUIDELINES

No department employees in the performance of their duties, including recruitment, selection, appointment, promotion, delegation, training, discipline, or separation, shall discriminate against any person because of race, color, religious creed, ancestry, gender identity and expression, union membership, age, sex, sexual orientation, national origin, AIDS or HIV status or disability.

RESPONSIBILITY

Deputy secretaries, office/bureau directors, managers, supervisors and employees all have a responsibility to ensure that discrimination does not occur. Deputy secretaries are responsible for providing equal opportunities in all employment actions and for developing and implementing equal employment opportunity plans to achieve an equitable representation of minorities and women in their assigned work force. Managers at all levels are expected to participate in equal employment opportunity implementation, planning, and monitoring for their assigned areas. Managers will make every effort to hire and promote members of all minority groups and women into classes in all areas where they have traditionally been, and are currently, underrepresented. Managers should establish career development programs, including appropriate training and work experience, to increase opportunities for upward mobility for their employees.

Managers are responsible for providing reasonable accommodations to enable employees to perform the essential functions of a job. Managers are also required to provide reasonable accommodations to enable applicants to complete the application process. In offering employment and promotions to persons with disabilities, there shall be no reductions in compensation that would result because of disability income or other benefits.

The Office of Equal Opportunity is responsible for developing and implementing program requirements, monitoring program progress and developing and implementing equal employment opportunity plans to achieve an equitable representation of minorities and women in their assigned work force. The Office of Equal Opportunity will assist in the evaluation of management's performance relating to the success of the equal employment opportunity program/plan, which will be evaluated in the same way as other objectives are measured.

COMPLAINT PROCEDURES

INTERNAL COMPLAINT PROCEDURE

Complaints of discrimination based on race, color, religious creed, ancestry, union membership, age, sex, sexual orientation, national origin, disability or AIDS or HIV status should be brought to the attention of the supervisor, or manager if the supervisor is the alleged perpetrator. Employees may also file a complaint within ninety (90) days to:

Rhonda D. Ross, Acting Director
Pennsylvania Department of Labor & Industry
Office of Equal Opportunity
651 Boas Street, Room 1402
Harrisburg, Pennsylvania, 17121
Telephone 800.622.5422 or 717.787.1182
Email: rross@pa.gov
PA Relay: 711

EXTERNAL COMPLAINT PROCEDURE

Complaints of discrimination based on race, color, religious creed, ancestry, age, sex, national origin or non-job related disability may be filed with: the State Civil Service Commission within **20 days** of the alleged incident(s); the Pennsylvania Human Relations Commission within **180 days** of the alleged incident(s); or the Equal Employment Opportunity Commission within **300 days** of the alleged incident(s).

RETALIATION

This policy prohibits retaliation against employees who file discrimination charges or assist in the investigation of charges. Any employee who files a discrimination complaint or assists in the investigation of such a complaint will not be adversely affected in terms and conditions of employment, discriminated against or discharged because of the complaint.

pennsylvania
DEPARTMENT OF LABOR & INDUSTRY
THE SECRETARY

DATE: **February 28, 2014**

SUBJECT: Policy on Contract Compliance

TO: All Labor & Industry Employees

FROM: Julia K. Hearthway
Secretary

In accordance with federal and state legislation and in compliance with the Governor's Executive Order, the Department of Labor & Industry (department) reaffirms its commitment to equal opportunity and non-discrimination in commonwealth contracting activities. To ensure adherence to this policy, I have assigned the Deputy Secretary for Administration as the responsible official for this program.

The department is hereby committed to a fundamental policy of nondiscrimination for all persons, regardless of race, color, religion, ancestry, union membership, age, sex, national origin, or non-job related disability. Additionally, the department is committed to the Americans with Disabilities Act (ADA) and its implementation and enforcement in regard to its contractors. All contracting practices, including procurement, construction, and service delivery, will be conducted under the precept of equal opportunity.

All department personnel who participate in contracting, purchasing, contract compliance planning, implementation and monitoring shall be accountable to the policy described above. Management's performance, relating to the success of the department's contract compliance program, will be evaluated in the same way as other department objectives with a particular emphasis directed to monitoring all contracting activities performed by the department. Further, we will monitor the implementation of this policy statement to ensure that all of the department's contract solicitations and award processes are conducted in a nondiscriminatory manner.

Any person who has a complaint against any practice which they feel is discriminatory under this policy, may report their complaint to Ms. Rhonda D. Ross, Acting Director of the Office of Equal Opportunity, Pennsylvania Department of Labor & Industry, Labor & Industry Building, 651 Boas Street, Room 1402, Harrisburg, Pennsylvania 17121, telephone 800.622.5422 or 717.787.1182, email rross@pa.gov or via the PA Relay Service at 711.

pennsylvania
DEPARTMENT OF LABOR & INDUSTRY
THE SECRETARY

DATE: **February 28, 2014**

SUBJECT: Policy on Disability-Related Employment

TO: All Labor & Industry Employees

FROM: Julia K. Hearthway
Secretary

This is to reaffirm the policy of the Department of Labor & Industry (department) to maintain an open and equitable personnel system for all employees and applicants with disabilities. This is in accordance with the Governor's initiatives on employing persons with disabilities and employment-related provisions of the Americans with Disabilities Act (ADA) of 1990, as amended, Section 504 of the Rehabilitation Act of 1973, and the Pennsylvania Human Relations Act.

Individuals with disabilities shall be treated with respect and dignity and be provided meaningful access to employment opportunities. Directors, managers and supervisors in the performance of their duties, including recruitment, selection, appointment, promotion, delegation, training, discipline, separation, compensation and other terms, conditions or privileges of employment shall not discriminate against any person because of their disability.

All directors, managers and supervisors are to familiarize themselves with and abide by the provisions of Executive Order 2002-5, dated May 3, 2002, "Disability-Related Policy" and with Management Directive 205.25 Amended, dated February 13, 2009, "Disability-Related Employment Policy."

An individual with a disability is a person who has a physical or mental impairment that substantially limits one or more major life activities, has a record of such impairment or is regarded as having such impairment.

A qualified individual with a disability is an individual who satisfies the requisite skill, experience, education and other job-related requirements of the employment position the individual holds or seeks, and who, with or without a reasonable accommodation, can perform the essential functions of the position. Reasonable accommodations may include, but are not limited to:

(1) Modifications or adjustments to a job application process that enable applicants with disabilities to be considered for the position desired.

(2) Modifications or an adjustment to the work environment, or to the manner or circumstances under which the position held or desired is customarily performed, that enable a qualified individual with a disability to perform the essential functions of that position.

(3) Modifications or adjustments that enable an employee with a disability to enjoy equal benefits and privileges of employment as are enjoyed by other similarly situated employees without disabilities.

The below procedure **must** be followed each time a request for an accommodation under the Disability-Related Employment Policy is filed:

Step 1: Employee must complete the front side of LIBHR-50 form, to include appropriate medical documentation.

Step 2: Employee must forward the request and medical documentation in an envelope marked "confidential" to his/her supervisor for review.

Step 3: Upon completing the review, the supervisor should discuss the accommodation request with the employee and the site/office manager.

Step 4: Supervisor should annotate the LIBHR-50 form with comments that support why the request should be approved or denied and forward the form and supporting documentation in a sealed envelope marked "confidential" to the site/office manager.

Step 5: Site/office manager should review the request and supporting documents to determine whether the request is for a minor adjustment. If the change is a minor adjustment and is being implemented the form should be annotated accordingly; the employee informed that the change is being made; and the form and supporting documents sent to the agency Disability Services Coordinator. If the adjustment is not minor or the change cannot be made, the site/office manager will annotate the form accordingly; inform the employee the request is being forwarded for department review; and submit the form and supporting documents to the agency Disability Services Coordinator.

Employees of or applicants for positions with the department may address questions or concerns regarding this policy and the above procedure to David Hann, Agency Disability Services Coordinator, Department of Labor & Industry, 651 Boas Street, Room 1412, Harrisburg, Pennsylvania 17121, telephone 717.346.3279, or via the PA Relay Service at 711.

Table of Contents

		PAGE
I	Policy Statement	2
II	Policy Dissemination	3
III	Responsibilities	4
IV	Guidelines	7
	Who is a Limited English Proficient (LEP) Individual?	7
	Four Factors Assessment	7
V	Language Assistance Service	10
	Interpretation	10
	Translation	14
	Safe Harbor	16
VI	Elements of an Effective LEP Plan	19
VII	Voluntary Compliance Effort	22
VIII	Labor and Industry's Administrative Policy and Procedures	24
IX	Labor and Industry's Yearly Timeline for LEP Activities	36
X	Labor and Industry's Equal Opportunity Monitoring Process	37
XI	Attachments	
	Department of Labor and Industry's Limited English Proficiency Training Module (add copy of EO Module)	
	Limited English Proficiency Population in Pennsylvania (2000 Census)	
	Commonwealth Language Translation and Interpretation Services Contract	
	"I Speak Card"	
	FQA	

LIMITED ENGLISH PROFICIENCY POLICY STATEMENT

Regulations

Under Title VI of the Civil Rights Act of 1964, the US Department of Labor requires that recipients of federal financial assistance provide meaningful access to their programs, activities, and services to individuals with limited English proficiency. The Executive Order 13166 of 2000 directs that federal agencies extending financial assistance must require that 1) recipient agencies comply with the requirements of Title VI, Limited English Proficiency provisions and 2) provide guidance to such recipients that is consistent with the standards of compliance specified by the Department of Justice.

In conformance with the Executive Order 13166, the US Department of Labor's Civil Rights Center established guidance for recipients of federal financial assistance pertaining to their responsibilities under Title VI of the Civil Rights Act of 1964, Prohibition Against National Origin Discrimination Affecting Limited English Proficient Persons (LEP). The Civil Rights Center's Policy Guidance for Federal Financial Assistance Recipients reiterates that recipients of federal assistance are responsible for ensuring meaningful access to their programs, benefits, services, and activities to limited English proficient individuals.

Policy

In conformity with federal regulations, the Pennsylvania Department of Labor and Industry directs that recipients and sub-recipients of federal financial assistance under its jurisdiction, must develop and implement a course of action or Program Plan that is consistent with the requirements of Title VI of the Civil Rights Act of 1964, Prohibition Against National Origin Discrimination Affecting Limited English Proficient Persons (LEP) to ensure meaningful access to their programs, benefits, services and activities to limited English proficient persons.

The Pennsylvania Department of Labor & Industry's Office of Equal Opportunity is entrusted with the responsibility of 1) developing an agency-wide Program Plan to ensure that recipients and sub-recipients of federal assistance are providing meaningful access to their programs, services, benefits, and activities to limited English proficient individuals in a consistent manner; 2) increasing awareness of the Limited English Proficiency Policy in the Department of Labor and Industry, and monitoring department wide LEP activities.

DISSEMINATION OF LEP POLICY STATEMENT

1. The Director of the Office of Equal Opportunity is responsible for disseminating the Limited English Proficiency Policy (LEP) Statement.

2. The Deputy Secretaries, Executive Directors, and Bureau Directors are responsible for reasserting and reiterating, as appropriate, the Limited English Proficiency Policy within their organizational areas.

3. The Department's LEP Program Contacts designated by individual Bureaus, Offices, and Programs will ensure that grantees and sub-grantees, contractors and sub-contractors statewide attain awareness of the LEP policies department-wide and externally.

RESPONSIBILITIES

A. Executive Level

The Secretary of Labor and Industry has overall responsibility for the Department of Labor and Industry's Limited English Proficiency Program.

B. Deputy Secretaries

The Deputy Secretaries for Worforce Development, Unemployment Compensation Programs, Safety and Labor-Management Relations, Administration, Vocational Rehabilitation and Compensation and Insurance are responsible for the administration, overall management, operation, implementation, and assurance of compliance with Title VI of the Civil Rights Act of 1964, Limited English Proficiency requirements within their organizational areas.

Each Deputy Secretary has the responsibility for ensuring that programs and services under their jurisdiction are accessible to Limited English Proficient persons.

Each Deputy Secretary has the responsibility for ensuring that programs and services under their jurisdiction provided through contractors, grantees, and sub-recipients are accessible to Limited English Proficient persons.

C. Office of Equal Opportunity

The Director of the Office of Equal Opportunity is responsible for overseeing the Department of Labor and Industry's compliance with Title VI of 1964, Limited English Proficiency federal and state statutory provisions and for designating and providing guidance to the Department's OEO/LEP Committee.

The policy charges the Department of Labor and Industry's Office of Equal Opportunity with the responsibility for:

- Providing LEP guidance to Labor and Industry program offices
- Providing training to LEP Program Contacts
- Monitoring and ensuring consistency of each L&I specific guideline
- The central collection and review of all L&I's LEP Plans

Consistency among Labor and Industry's federally assisted programs is particularly important. Inconsistency or contradictory interpretation of this guidance may cause confusion and needlessly increase costs without rendering meaningful access to LEP Persons.

As with most government initiatives, this requires balancing several principles. While this guidance discusses that balance in some detail, it is important to note the basic principles behind that balance. First, the Department of Labor and Industry, herein referred to as "L&I", must ensure that Federally assisted programs aimed at Pennsylvania residents do not leave some behind simply because they face challenges communicating in English. This is particularly important because, in many cases, LEP individuals represent a substantial portion of those encountered in federally assisted programs. Second, L&I must achieve this goal while finding constructive methods to reduce the costs of LEP requirements on sub-contractors, training providers and non-profit organizations that receive Federal financial assistance.

This guidance does not address communication issues covered under the Americans with Disabilities Act (ADA) or other applicable laws, regulations, or policies.

This guidance addresses proficiency, not preference of language.

The Office of Equal Opportunity's LEP Program Committee is responsible for monitoring the development and implementation of an LEP Program Plan by individual programs and service areas department -wide to include the following:

- Streamlining L&I 's LEP efforts.
- Serving as the main contact for LEP related issues in L&I.
- Presiding at committee meetings with designated LEP Program Contacts.
- Providing LEP technical assistance to the L&I's LEP Program Contacts.
- Assisting L&I's LEP Program Contacts with developing an LEP Program Plan that meets the needs of their individual programs.
- Assisting L&I's LEP Program Contacts with developing training that addresses the needs of their individual programs.
- Assisting L&I's LEP Program Contacts in implementing LEP training as needed.
- Reviewing materials, publications, and procedures to ensure their compliance with Title VI.
- Working with the US Department of Labor's Civil Rights Center to resolve compliance issues related to the LEP provisions.
- Assisting L&I's LEP Program Contacts with developing ways to comply with LEP requirements that are cost efficient.
- Providing compliance reviews at State Employment Security Agencies and Local Workforce Investment Areas to facilitate compliance with LEP federal requirements.

- Responding to internal/external complaints related to the implementation of LEP regulations.
- Facilitating information pertaining to the Commonwealth's contracted services for language access internally and externally.

D. Bureau/Office LEP Program Contact

The Bureau's LEP Program Contact is responsible for coordinating and monitoring all LEP activities within the individual programs under their jurisdiction, such as:

- Developing an LEP Program Plan that meets the needs of their respective programs.
- Implementing their individual LEP Program Plan.
- Developing LEP training that meets the needs of employees within their respective programs.
- Monitoring all LEP related activities within areas under their jurisdiction.
- Working with offices and programs within their jurisdiction to resolve issues related to the provision of LEP services
- Informing the Office of Equal Opportunity's LEP Program Committee of new developments in the area of LEP.
- Providing any LEP information requested by the OEO/LEP Program Committee regarding the individual programs under their jurisdiction.

GUIDELINES

Who is a Limited English Proficient (LEP) Individual?

Many Federal and State laws prohibit discrimination on the basis of race, color or national origin. A person who is "limited English proficient" typically is a national origin minority individual whose (1) primary language is not English, and (2) cannot speak, read, write or understand the English language at a level that permits the individual to interact effectively.

How does the Department of Labor and Industry determine the extent of its obligation to provide LEP services?

Labor and Industry programs that receive federal funding are required to take reasonable steps to ensure meaningful access to their services and activities by LEP persons. An Agency program that does not receive federal funds is strongly encouraged to take such steps. The LEP policy either requires or strongly recommends that L&I programs submit, through a designated LEP Program Contact, an annual program plan and status report.

The starting point for the development of an individualized Program Plan requires an assessment that balances four factors:

1. The **number** or proportion of LEP persons eligible to receive services or likely to be encountered by the program or grantee.
2. The **frequency** with which LEP individuals come in contact with the program.
3. The **nature and importance** of the program activity or service provided by the program to people's lives.
4. The **resources** available to the program.

The intent of this guidance is to recommend a balance that ensures meaningful access by LEP persons to critical Pennsylvania-wide programs and services while not imposing undue financial burdens on L&I's programs.

After applying the above four-factor analysis, an L&I program manager may conclude that different language assistance measures are sufficient for the different types of programs, services, or activities in which it engages. For instance, some program services and activities will be more important than others and/or have greater impact on or contact with LEP persons, and may require more in the way of language assistance. The flexibility that an L&I program manager has in addressing the needs of the LEP populations it serves

does not diminish, and should not be used to minimize his/her obligation to address those needs.

An L&I program manager should apply the four-factor analysis to the various kinds of contacts the program has with the public to assess their language needs and decide what reasonable steps he/she should take to ensure meaningful access to LEP persons.

(1) The number or proportion of LEP persons served or encountered in the eligible service population.

A factor in determining what language services should be provided is the number or proportion of LEP persons from a particular language group eligible to be served or encountered by an L&I program in carrying out its operations. Ordinarily, persons "eligible to be served, or likely to be directly affected" by the services or activities in a program are those who are served or encountered in the eligible service population. This population will be program specific, and includes persons who are in the geographic area that has been approved by L&I as a program service area. Where a region serves a large LEP population, the appropriate service area is most likely the county and not the entire population served by the region. Where no service area has previously been approved, the relevant service area may be that which is approved or designated by L&I itself, provided that these designations do not themselves discriminatorily exclude certain populations. When considering the number or proportion of LEP individuals in a service area, L&I programs should consider LEP parent(s) when their English-proficient or LEP minor children and dependents encounter the program, service or activity.

L&I programs should first examine its previous experiences with LEP encounters and determine the breadth and scope of language services that were needed. In conducting this analysis, it is important to include language minority populations that are eligible for the program's services or activities but may be under served because of language barriers. Other data should be consulted to refine or validate L&I programs' prior experience, including the latest Census data for the area served, data from school systems, community organizations, and others State and Local agencies. Community agencies, school systems, religious organizations, legal aid entities and others can often assist in identifying populations for whom outreach is needed and who would benefit from L&I programs, services and activities if language services were provided.

(2) The frequency with which LEP individuals come in contact with L&I programs.

L&I should assess the frequency with which individual programs have contact with LEP language groups. The more frequent the contact with a particular language group, the more likely that language services are needed. The steps

that are reasonable for a program that serves one person with LEP a year may be very different from those expected from a program that serves several persons with LEP each day. For example, frequent contacts with Spanish speaking individuals who are LEP may require certain assistance in Spanish. Less frequent contact with different language groups may suggest a different and less resource intensive solution. If an LEP individual accesses a program or service on a daily basis, the program has greater duties than if the same individual's access to a program or activity is unpredictable or infrequent. But even a program that serves LEP individuals on an unpredictable or infrequent basis should use this balancing analysis to determine what to do if an LEP individual seeks services under the program in question. This plan does not need to be complex. It may be as simple as being prepared to use 1) the Department of General Services' Language Assistance contracted services or 2) a commercially available telephonic interpretation services to obtain immediate interpreter services. In applying this standard, a program should take care to consider whether appropriate outreach to LEP individuals could increase the frequency of contact with LEP.

(3) The <u>nature and importance</u> of the program, activity, or service provided by L&I.

The more important the activity, information, service, or program, or the greater the possible consequences of the contact to LEP individuals, the more likely language assistance is needed. L&I programs need to determine whether denial or delay of access to services or information could have serious implications for the LEP individual. For example, a decision by an Agency to make an activity compulsory, such as the requirement of a driver license or the communication of Miranda Rights, can serve as strong evidence of the program's importance.

(4) The <u>resources available</u> to L&I programs and costs

The program's level of resources and the costs that would be imposed on it may have an impact on the nature of the steps it should take. In addition, "reasonable steps" may cease to be reasonable where the costs imposed substantially exceed the benefits.

However, resource and cost issues can be reduced through technological advances, by sharing language assistance materials and services between programs, agencies, advocacy groups, Federal Grant Agencies and by identifying statewide reasonable and/or best practices. Where appropriate, there are strategies that may help reduce costs and resource issues, such as hiring bilingual staff who could also act as interpreters and translators; information sharing through industry groups; telephonic and video conferencing; interpretation services; pooling resources and standardizing documents to reduce translation services needs; using the Department of General Service's Language Services Contract for qualified translators and interpreters to ensure that documents need

not be "fixed" later and that inaccurate interpretations do not cause delay or other costs; or the formalized use of qualified community volunteers. All L&I programs should carefully explore the most cost-effective means of delivering competent and accurate language services before limiting services due to resource concerns. Large programs and those programs serving a significant number or proportion of LEP individuals should ensure that their resource limitations are well-substantiated before using this factor as a reason to limit language assistance. Such programs may find it useful to be able to articulate their process for determining that language services would be limited based on resources or costs through documentation or in some other reasonable manner.

Selecting language assistance services

There are two main ways to provide language services: oral interpretation either in person or via telephone interpretation service ("interpretation") and written translation ("translation"). The quality and accuracy of the language service is critical in order to avoid serious consequences to the LEP individual and to L&I. Oral interpretation can range from on-site interpreters for critical services provided to a high volume of LEP individuals through the Department of General Services' Language Assistance Contract or through commercially available telephone interpretation services. Written translation can range from translation of an entire document to translation of a short description of the document. In some cases, language services should be made available on an expedited basis while in others the LEP individual may be referred to a sister program or office for language assistance.

The correct combination should be based on what is both necessary and reasonable in light of the four-factor analysis. For instance, a public Federally funded assistance department providing assistance to a largely Hispanic clientele may need immediate oral interpreters available and should give serious consideration to hiring some bilingual staff. In contrast, there may be circumstances where the importance and nature of the program, service or activity may be low or the number or proportion and frequency of contact with LEP individuals may be low. In such a case, the use of the language line will be sufficient to provide language services.

A. Oral language services (interpretation)

Interpretation is the act of listening to something in one language (source language) and orally translating it into another language (target language). Where interpretation is needed and is reasonable, individual programs should consider some or all the following options for providing competent interpreters in a timely manner.

Competence of interpreters

When providing oral assistance, the competency of the language service provider must be ensured, no matter which of the strategies outlined below is used. Competency requires more than self-identification as bilingual.

Some bilingual staff and community volunteers, for instance, may be able to communicate effectively in a different language when communicating information directly in that language, but may not be competent to interpret in and out of English. Likewise, they may not be able to perform written translations.

Competency to interpret, however, does not necessarily mean formal certification as an interpreter, although certification is helpful. When using an interpreter, an L&I program should ensure that he/she:

- Demonstrates proficiency in and ability to communicate information accurately in both English and in the other language and identify and employ the appropriate mode of interpreting (e.g., consecutive, simultaneous, summarization, or sight translations);

- Has knowledge in both languages of any specialized terms or concepts peculiar to the program or activity and of any particularized vocabulary and phraseology used by the LEP person;

- Understands and follows confidentiality and impartiality rules to the same extent the agency employee for whom he/she is interpreting and/or to the extent their position requires;

- Understands and adheres to their role as interpreters <u>without</u> deviating into a role as counselor, legal advisor, or other roles (particularly in court, administrative hearings, or law enforcement contexts).

Some Bureaus and Offices in Labor and Industry may have additional self-imposed requirements for interpreters. Where individual rights depend on precise, complete, and accurate interpretation or translation, the use of certified interpreters is strongly encouraged. Where such proceedings are lengthy (2-hour maximum), the interpreter will likely need breaks and team interpreting may be appropriate to ensure accuracy and to prevent errors caused by mental fatigue of interpreters.

<u>Hiring bilingual staff</u>

When particular languages are encountered often, hiring bilingual staff offers one of the best, and often most economical, options. If bilingual staff is also used to interpret between English speakers and LEP persons, or to orally interpret written documents from English into another language, they should be competent in the skill of interpreting. Being bilingual does not necessarily mean that a person has the ability to interpret. In addition, there may be times when the <u>role of the bilingual employee may conflict with the role of an interpreter</u> (for instance, a bilingual law clerk would probably not be able to perform effectively the role of a courtroom or administrative

hearing interpreter and law clerk at the same time, even if the law clerk were a qualified interpreter). Effective management strategies, including any appropriate adjustments in assignments and protocols for using bilingual staff, can ensure that bilingual staff is fully and appropriately utilized. When bilingual staff cannot meet all of the language service obligations, the L&I Program management should turn to other options.

Hiring staff interpreters

Hiring interpreters may be most helpful where there is a frequent need for interpreting services in one or more languages. Depending on the facts, sometimes it may be necessary and reasonable to provide on-site interpreters to provide accurate and meaningful communication with an LEP individual. Contract interpreters may be a cost-effective option when there is no regular need for a particular language skill. In addition to the Department of General Services' Language Assistance contract and commercial and other private providers, many community-based organizations and mutual assistance associations provide interpretation services for particular languages. Providing training regarding L&I programs, services, and processes to these organizations can be a cost-effective option for providing language services to LEP individuals.

Using telephone interpreter lines

Telephone interpreter service lines often offer speedy interpreting assistance in many different languages. They may be particularly appropriate where the mode of communicating with an English proficient person would also be over the telephone. Although telephonic interpretation services are useful in many situations, it is important to ensure that, when using such services, the interpreters used are competent to interpret any technical or legal terms specific to a particular L&I program that may be important parts of the conversation. Nuances in language and non-verbal communication can often assist an interpreter and cannot be recognized over the phone. Video teleconferencing may sometimes help to resolve this issue where necessary. In addition, where documents are being discussed, it is important to give telephonic interpreters adequate opportunity to review the document prior to the discussion and any logistical problems should be addressed.

Using Community Volunteers

The use of coordinated community volunteers and working with community-based organizations may provide a cost effective supplemental language assistance strategy under appropriate circumstances. Community volunteers may be particularly useful in providing language access for a program's less critical services and activities. To the extent the program staff relies on community volunteers, it is often best to use volunteers who are trained in the information or services of the program and can communicate directly with LEP persons in their language. Just as with all

interpreters, community volunteers used to interpret between English speakers and LEP persons, or to orally translate documents, should be competent in the skill of interpreting and knowledgeable about applicable confidentiality and impartiality rules. Individual programs should consider formal arrangements with community-based organizations that provide volunteers to address these concerns and to help ensure that services are available more regularly.

Using Family Members, Friends, or other Personal Acquaintances as Interpreters

Although L&I programs should not rely on an LEP person's family members, friends, or other informal interpreters to provide meaningful access to important programs and activities, at the discretion of individual programs, and where LEP persons so desire, they should be permitted to use, at their own expense, an interpreter of their own choosing (whether a professional interpreter, family members, friend, or other personal acquaintance) in place of or as a supplement to, the free language services expressly offered by L&I programs. LEP persons may feel more comfortable when a trusted family member, friend, or other acquaintance acts as an interpreter. In addition, in exigent circumstances that are not reasonable foreseeable, temporary use of interpreters not provided by a program may be necessary. However, with proper planning and implementation, L&I programs should be able to avoid most such situations.

L&I programs, however, should take special care to ensure that family, legal guardians, caretakers, and other informal interpreters are appropriate in light of the circumstances and subject matter of the program, service or activity, including protection of L&I's own administrative or enforcement interest. In many circumstances, family members (especially children), friends, other acquaintances are not competent to provide quality and accurate interpretations. Issues of confidentiality, privacy, or conflict of interest may also arise. LEP individuals may feel uncomfortable revealing or describing sensitive, confidential, or potentially embarrassing medical, law enforcement, family, or financial information to a family member, friend, or member of the local community. In addition, such informal interpreters may have a personal connection to the LEP person or an undisclosed conflict of interest, such as the desire to protect themselves or another in a criminal or civil matter. For these reasons, when oral language services are necessary, competent interpreter services should be offered to the LEP person free of cost. This is particularly true in an administrative hearing, pre and post proceedings, situations in which health, safety, or access to important benefits and services are at stake, or when credibility and accuracy are important to protect an individual's rights and access to important services.

If the LEP person voluntarily chooses to provide his or her own interpreter, the program staff should keep a record of that choice and of the offer of assistance as appropriate. Where precise, complete, and accurate interpretations of translations of information and/or testimony are critical for law enforcement, adjudicatory, or legal reasons, or where the competency of the LEP person's interpreter is not established, program staff should provide its own, independent interpreter, even if the LEP person wants to use his or her own interpreter as well. Extra caution should be exercised when the LEP person chooses to use a minor as the interpreter. While the LEP person's decision should be respected, there may be additional issues of competency, confidentiality, or conflict of interest when the choice involves using children as interpreters. The L&I program staff should take care to ensure that the LEP person's choice is voluntary, that the LEP person is aware of the possible problems if the preferred interpreter is a minor child, and that the LEP person knows that a competent interpreter will be provided by the program at no cost. The quality and accuracy of language services is critical as part of the appropriate combination of LEP services required.

Finally, when interpretation is needed and is reasonable, it should be provided in a timely manner to be meaningful and effective. While there is no single definition for "timely" applicable to all types of interactions at all times by all types of programs, one clear guide is that the language assistance should be provided at a time and place that avoids the effective denial of the service, benefit, or right at issue or the imposition of an undue burden on or delay in important rights, benefits, or services to the LEP person. Caution must be exercised when the delivery of services could likely result in delays for LEP persons that would be significantly greater than those for English proficient persons. Conversely, where access to a program, service, benefit, or right is not effectively precluded by a reasonable delay, language assistance can likely be delayed for a reasonable period.

B. Written Language Services (Translation)

Translation is the replacement of a written text from one language (source language) with an equivalent written text in another language (target language).

What Documents Should be Translated?

After applying the four-factor analysis, an L&I program may determine that an effective LEP plan for its particular service or activity includes the translation of vital written materials into the language of each frequently encountered LEP group eligible to be served and/or likely to be affected by the program.

Such written materials could include:

- Consent and complaint forms
- Intake forms with the potential for important consequences
- Written notices of rights, denial, loss, or decreases in benefits or services, parole, and other hearings
- Notices of disciplinary action
- Notices advising LEP persons of free language assistance
- Rule books/manuals
- Written tests that do not assess English language competency, but test competency for a particular license, job, or skill for which knowing English is not required
- Public participation hearings
- Community outreach
- Applications to participate in a program or activity or to receive benefits or services

Whether or not a document (or the information it solicits) is "vital" may depend upon the importance of the program, information, encounter, or service involved, and the consequence to the LEP person if the information in question is not provided accurately or in a timely manner. L&I programs are encouraged to create a plan for consistently determining, over time and across its various activities, what documents are "vital" to the meaningful access of the LEP populations they serve.

Classifying a document as vital or non-vital is sometimes difficult, especially in the case of outreach materials like brochures or other information on rights and services. Awareness of rights is an important part of meaningful access. Lack of awareness that a particular L&I program, right, or service exists may effectively deny LEP individuals meaningful access. Thus, where an L&I program is engaged in community outreach activities in furtherance of its activities, it should regularly assess the needs of the populations frequently encountered or affected by the program or activity to determine whether certain critical outreach materials should be translated. Community organizations may be helpful in determining what outreach materials may be most helpful to translate. In addition, the L&I program should consider whether translations of outreach material may be made more effective when done in a tandem fashion with other outreach methods, including utilizing the ethnic media, schools, religious, and community organizations to spread the message.

Sometimes a document includes both vital and non-vital information. This may be the case when the document is very large. It may also be the case when the title and contact phone number for obtaining more information is critical to be published in multiple languages, but the document itself is sent out to the general public and cannot reasonably be translated into many languages. Thus, vital information may include the provision of

information in appropriate languages other than English regarding where LEP persons might obtain an interpretation or translation of this document.

Into What Languages Should Documents be Translated?

The languages spoken by the LEP individuals with whom L&I programs have contact determine the languages into which vital documents should be translated. A distinction should be made, however, between languages that are frequently encountered by an L&I program and less commonly encountered languages. L&I programs serve communities in cities and across rural areas and encounter LEP persons who speak different languages. To translate all written materials into all of those languages is unrealistic. Although recent technological advances have made it easier for an Agency to store and share translated documents, such an undertaking would incur substantial costs and require substantial resources.

Well-substantiated claims of lack of resources to translate all vital documents into dozens of languages do not necessarily relieve L&I programs of the obligation to translate those documents. As a result, the extent of the obligation to provide written translations of documents should be determined by the L&I program on a case-by-case basis, looking at the totality of the circumstances in light of the four-factor analysis. Because often the cost of translation may need to be re-incurred each time the content of the document is substantively revised, consideration should be given to whether the upfront cost of translating a document (as opposed to oral interpretation) should be amortized over the likely lifespan of the document when applying this four factor analysis.

Safe Harbors

Paragraphs (a) and (b) below outline the circumstances that can provide a "safe harbor" for entities regarding the requirements for translation of written materials. A "safe harbor" means that if the entity provides written translation under these circumstances, such action will be considered strong evidence of compliance with the Agency's written translation obligations.

The failure to provide written translations under the circumstances outlined in paragraphs (a) and (b) does not mean there is non-compliance. Rather, they provide a common starting point for the entity to consider whether, and at what point the importance of the service, benefit, or activity involved calls for written translations of commonly used forms into frequently encountered languages other than English.

Thus, these paragraphs provide a guide for any L&I program that want a greater certainty of compliance than can be provided by a fact-intensive four-factor analysis. Example: Even if the safe harbors are not used, if

written translation of certain document(s) would be so burdensome as to defeat the legitimate objectives of its program, the translation of the written materials is not necessary. Other ways of providing meaningful access, such as effective oral interpretation of certain vital documents, might be acceptable under such circumstances.

The following actions will be considered strong evidence of compliance with L&I's written translation obligations:

a) *The provision of written translations of vital documents for each eligible LEP language group that constitutes five percent or 1,000, whichever is less, of the population of persons eligible to be served or likely to be affected or encountered. Translation of other documents, if needed, can be provided orally;*

b) *If there are fewer than 50 persons in a language group that reaches the five percent trigger (as indicated in "a" above), the entity does not translate vital written materials but provides written notice in the primary language of the LEP language group of the right to receive competent oral interpretation of those written materials, free of cost.*

These safe harbor guidelines apply to the translation of written documents only. They do not affect the requirement to provide meaningful access to LEP individuals through competent oral interpreters where oral language services are needed and are reasonable.

Competence of Translators

As with oral interpreters, translators of written documents should be competent. Many of the same considerations apply. However, the skill of translating is very different from the skill of interpreting, and a person who is a competent interpreter may or may not be competent to translate.

Particularly where legal or other vital documents are being translated, competence can often be achieved by use of certified translators. Certification or accreditation may not always be possible or necessary. Having a second, independent translator review the work of the primary translator can often ensure competence. Alternatively, one translator can translate the document, and a second, independent translator could translate it back into English to check that the appropriate meaning has been conveyed. This is called "back translation".

Translators should understand the expected reading level of the audience and, where appropriate, have fundamental knowledge about the target language group's vocabulary and phraseology. Sometimes direct translation of materials results in a translation that is written at a much more difficult level than the English language version or has no relevant

equivalent meaning. Community organizations may be able to help consider whether a document is written at a good level for the audience. Likewise, consistency in the words and phrases used to translate terms of art, legal, or other technical concepts helps avoid confusion by LEP individuals and may reduce costs. Creating or using ready created glossaries of commonly used terms may be useful for LEP persons and translators and cost effective for the service provider. Providing translators with examples of previous accurate translations of similar material by L&I, other State Agencies, or Federal Agencies like USDOJ may be helpful.

ELEMENTS OF AN EFFECTIVE LEP PLAN

After completing the four-factor analysis and deciding what language assistance services are appropriate, the L&I program should develop an implementation plan to address the identified needs of the LEP populations they serve. L&I programs have considerable flexibility in developing this plan. The development and maintenance of a periodically updated written plan on language assistance for LEP persons (LEP Plan) for use by L&I program staff serving the public will likely be the most appropriate and cost effective means of documenting compliance and providing a framework for the provision of timely and reasonable language assistance.

Written plans would provide additional benefits to the L&I program managers and administrators in the areas of training, administration, planning, and budgeting. These benefits should lead most programs to document in a written LEP Plan their language assistance services, and how staff and LEP persons can access those services. L&I programs serving very few LEP persons and/or with very limited resources may choose to develop and submit a "Summary LEP Plan".

In the event that an L&I program submits a "Summary LEP Plan", it should include alternative ways to articulate in some other reasonable manner a plan for providing meaningful access. Programs having significant contact with LEP persons, such as the Unemployment Compensation Insurance or Employment Security services can be very helpful in providing important input into smaller Programs' LEP planning processes.

The following five steps may be helpful in designing an LEP Plan and are typically part of effective implementation plans.

(1) Identifying LEP Individuals Who Need Language Assistance

The first two factors in the four-factor analysis require an assessment of the number or proportion of LEP individuals eligible to be served or encountered and the frequency of encounters. This requires that an L&I program identify LEP persons with whom it has contact.

One way to determine the language of communication is to use language identification cards (or "I Speak" Cards), which invite LEP persons to identify their language needs to staff. Such cards, for instance, might say, "I speak Spanish" in both Spanish and English. The Census Bureau "I Speak Cards" can be found and downloaded at: http://www.usdoj.gov/crt/cor/13166.htm.

When records are normally kept of past interactions with members of the public, the language of the LEP person can be included as part of the record.

In addition to helping employees identify the language of LEP persons they encounter, this process will help in future applications of the first two factors of the four factor analysis. In addition, posting notices in commonly encountered languages notifying LEP persons of language assistance will encourage them to self-identify.

(2) Language Assistance Measures

An effective LEP Plan would likely include information about the ways in which language assistance will be provided. For instance, an L&I program may want to include information on at least the following:

- Types of language services available
- How staff can obtain those services
- How to respond to LEP callers
- How to respond to written communications from LEP persons
- How to respond to LEP individuals who have in person contact with L&I program staff
- How to ensure competency of interpreters and translation services

(3) Training Staff

L&I program staff must know their obligations to provide meaningful access to information and services for LEP persons. An effective LEP plan must include training to ensure that:

- All staff has a basic understanding of the Agency's LEP policies and procedures.
- Staff members having contact with the public are trained to work effectively with in person and telephone interpreters.

L&I should include this training as part of the orientation for new employees. It is important to ensure that all employees in public contact positions are properly trained. The more frequent the contact with LEP persons, the greater the need will be for in depth training. Staff members with little or no contact with LEP persons may only have to be aware of an LEP Plan. However, management staff, even if they do not interact regularly with LEP persons, should be fully aware of and understand the Plan so they can reinforce its importance and ensure its implementation by staff.

(4) Providing Notice to LEP Persons

Once an L&I program has decided, based on the four factors, that it will provide language services, it is important for the program to let LEP persons know that those services are available and that they are free of charge. The programs should provide this notice in languages LEP persons would understand. Examples of notification that the programs should consider include:

- Posting signs in intake areas and other entry points. When language assistance is needed to ensure meaningful access to

information and services, it is important to provide notice in appropriate languages. This is particularly true in areas with high volumes of LEP persons seeking access to the program's services. For instance, signs in intake offices could state that free language assistance is available. The signs should be translated into the most common languages encountered. They should explain how to get the language help.

- Stating in outreach documents that "language services are available free of cost" from the program. Announcements could be in brochures, booklets, and in outreach and recruitment information. The "tag line" should be translated into the most common languages spoken in the service area and placed on the front of common documents.
- Enlisting community based organizations to inform LEP individuals of the L&I program services, including the availability of language assistance services.
- Using a telephone voice mail menu. The menu could be in the most common languages encountered. It should provide information about available language assistance services and how to get them.
- Including notices in local newspapers in languages other than English.
- Providing notices on non-English language radio and television stations about the available language assistance services and how to get them.
- Presentations and/or notices at school and religious organizations.

(5) Monitoring and Updating the LEP Plan

Where appropriate, L&I programs should have an ongoing process for determining whether new documents, programs, services, and activities need to be made accessible for LEP individuals. The L&I program may want to provide notice of any changes in services to the LEP public and to employees. In addition, programs must consider whether changes in demographics, types of services, or other needs require annual reevaluation of their LEP Plan. In annual updates to the plan, L&I programs may want to consider assessing changes in:

- Current LEP populations in service area or population affected or encountered.
- Frequency of encounters with LEP language groups.
- Nature and importance of activities to LEP persons.
- Availability of resources, including technological advances and sources of additional resources, and the costs imposed.
- Whether existing assistance is meeting the needs of LEP persons.
- Whether staff knows and understands the LEP plan and how to implement it.

- Whether identified sources for assistance are still available and viable.

In addition to these five elements, effective plans set clear goals, management accountability, and opportunities for community input and planning throughout the process.

Voluntary Compliance Effort

The goal is to provide meaningful access to LEP persons. The Department of Labor and Industry's Office of Equal Opportunity (OEO) enforces the LEP policy. The procedures used by the OEO include complaint investigations, compliance reviews, efforts to secure voluntary compliance, training, and technical assistance.

The OEO will engage in voluntary compliance efforts and provide technical assistance to Program areas at all stages of LEP program plan development, and in the case of an investigation. During these efforts, the OEO will propose reasonable timetables for achieving compliance and assist Program areas in exploring cost effective ways of coming into compliance.

The primary concern of the Office of Equal Opportunity is to ensure that L&I's policies and procedures provide meaningful access for LEP persons to the Agency's programs, services and activities.

The OEO recognizes that many Program areas have language assistance programs in place prior to the issuance of this policy. This policy provides a uniform framework for each Program area to integrate, formalize, and assess the continued vitality of these existing and possibly additional reasonable efforts based on the nature of its programs, services or activity, the current needs of the LEP populations it encounters, and its prior experience in providing language services in the community it serves. L&I programs should identify in the LEP Plan, language assistance programs already in place, critical documents already translated, and what languages are currently translated.

Title VI of the Civil Rights Act of 1964 and its implementing regulations require that Federal and State Agencies take responsible steps to ensure meaningful access to programs by LEP persons. This guidance provides a framework that programs in the Department of Labor & Industry may use to determine how best to comply in providing meaning access to benefits, services, information, and other important portions of their programs, services, and activities for individuals who are Limited English Proficient.

The focus of the analysis is on lack of English proficiency, not the ability to speak more than one language. People who are also overwhelmingly proficient in English may speak some of the most commonly spoken languages other than English. However, these may not be the languages spoken most frequently by

Limited English Proficient individuals. When using demographic data, it is important to focus on the languages spoken by those who ARE NOT proficient in English.

In general, languages have "regionalisms" or difference or preference in usage. Also, the level at which the language is used is directly affected by the educational attainment of the user. There may be languages that do not have an appropriate direct interpretation. A competent interpreter should be aware of and be able to provide the most appropriate interpretation taking into consideration regionalisms, difference or preference in usage and most importantly the level at which the target language is used and comprehended by the LEP individual. A competent interpreter should make the program staff aware of the issue, and the interpreter and program staff can then work to develop a consistent and appropriate set of descriptions for these terms in a specific language that can be used again, when appropriate.

For those languages in which no formal accreditation currently exists, a particular level of membership in a professional translation association can provide some indicator of interpreter's professionalism. L&I programs will find it more effective and less costly if they try to maintain consistency in the words and phrases used to translate legal terminology or other technical concepts such as unemployment compensation, appeal rights and processes, claimants, registrants, etc. Providing translators and interpreters with examples of previous translations of similar material by L&I programs, other State Agencies, or Federal Agencies may be helpful as well.

ADMINISTRATIVE POLICES & PROCEDURES

STATE OF PENNSYLVANIA

DEPARTMENT OF LABOR AND INDUSTRY

Subject:	**Department of Labor & Industry Language Assistance Policy**		
Approved by:	_____	**Issue Date:**	**November __, 2005**
Issued by:	**Autro Heath, Jr., Acting Director** **Office of Equal Opportunity**		
Referenced Laws:			

PURPOSE

This policy clarifies standards for making the Department of Labor and Industry's services accessible to customers with Limited English Proficiency (LEP), which are consistent with federal and state law and well-established LEP principles. This policy is to be implemented by programs under the Department of Labor and Industry's jurisdiction, statewide.

SCOPE

This policy covers all Department of Labor and Industry customer service activities and benefit programs, including Local Workforce Investment Areas covered under the Workforce Investment Act of 1998.

POLICY

The policy of the Department of Labor and Industry is to provide effective communication and adequate services to all of the Department's customers regardless of their English proficiency.

TABLE OF CONTENTS

Yearly Timeline of Key LEP Activities

I. Assessing language assistance delivery needs
   1. Using the four-factor analysis
   2. Identification of essential languages and offices serving significant LEP populations
   3. L&I's Office of Equal Opportunity Director as key decision maker
   4. Notification of CareerLinks/Local Workforce Investment Areas/Unemployment Service Centers and other field offices.

II. Notification of free language assistance
   1. Notification of free language assistance
   2. Office signage in essential languages

III. Outreach to LEP communities on the services and programs provided by the Department of Labor and Industry
   1. General Statement
   2. Development of outreach plan(s)
   3. Reporting on outreach efforts

IV. Communication with LEP customers
   1. Bilingual staff services
   2. Telephone interpretation services
   3. Written communication

V. Recruitment, hiring and use of bilingual staff
   1. Identification of need for bilingual positions

VI. Employee training in language assistance matters
   1. Training on telephone interpretation services
   2. Training on language assistance policy

VII. Monitoring of compliance with language assistance policy
   1. Regular monitoring and annual review of language assistance policy
   2. Annual assurance of required postings and signs for accessing services
   3. Yearly review of language line and Voice Mail
   4. Yearly LEP Compliance Report
   5. Language services complaint review and response

VIII. Federal and State laws applied in this policy

IX. Federal and State agencies contact information

I. ASSESSING LANGUAGE ASSISTANCE DELIVERY NEEDS

1. Using the Four Factor Analysis

When determining how to provide effective and adequate language service, the following federal four factors (Federal Register, Vol. 66,No.11, January 17, 2001) must be considered:

A. The number or proportion of LEP individuals eligible to participate or likely to be directly or significantly affected by the program or activity.
B. The frequency of contact a participant or beneficiary is required to have with the program or activity.
C. The nature and importance of the program or activity to the participant or beneficiary.
D. The resources available to the Department in carrying out the program or activity.

In addition, the Department of Labor and Industry will follow the US Department of Justice's Vital Documents Question and Answer guidelines **(Attached)**.

2. Identifying the "Essential Languages" and the Office serving a "significant LEP population."

"Essential Languages" are those languages spoken by a "significant LEP population" as identified in this paragraph. An annual assessment to determine the Department's programs and offices that serve a "significant LEP population" and the corresponding "essential language(s)" must be conducted by a designated staff member at the Bureau level. A program or an office serves a "significant LEP population" under the following conditions:

A. It is located or serves a county in which 5% or more of the population speak a particular language at home and speak English "not well or below" according to the 2000 Census data.
B. It is located or serves a county in which 1,000 or more persons speak a particular language at home and speak English "not well or below" according to the 2000 Census data.
C. Five percent or more of its customers register for department programs or services indicating they require assistance in a particular language, in a given program service year.

Thus, the office or program must provide vital documents and increased language services to "significant LEP populations" in the "essential Language(s) as established in this policy.

3. LEP Program Contact Person as Key Decision Maker

   The designated LEP Program Contact will determine when new programs or activities should be conducted in a LEP customer's language, or when new forms or notices should be published in a LEP customer's language.

4. Notification of New Field Office/One Stop System Programs and Activities

   Field office managers and administrators will notify the designated LEP Program Contact of all new local programs or activities, including the use of any proposed redesigned local or One Stop forms in order that a decision be made about providing the new program, form(s), or information in a "Significant LEP Population Essential Language".

II. NOTIFICATION OF FREE LANGUAGE ASSISTANCE FOR ACCESSING DEPARTMENT SERVICES

1. Notification of Free Language Assistance
   The LEP Program Contact must ensure that programs under his/her jurisdiction provide public notices regarding the language assistance policies and procedures for L&I. Individual field offices will ensure that their customers are notified that language assistance is available and is free of charge for L&I Program services.

2. Office Signage in Essential Languages
   The LEP Program Contact must ensure that signs are posted in the field office(s) lobbies or waiting areas and next to the telephone used to provide language access. This signage will inform participants, beneficiaries, registrants, and customers in general of the availability of free interpretation for L&I services and invite them to identify themselves as customers in need of language assistance. The LEP Program Contact must evaluate which signs and posters should indicate that *"Language Services are available free of charge"*.

III. PROGRAM PLAN FOR LABOR AND INDUSTRY PROGRAMS SERVICING LEP COMMUNITIES

1. General Statement
   A. Using the language assistance delivery needs assessment above mentioned as an identifier, service providers must conduct outreach activities in those sites that meet or exceed the "Significant LEP Population and Essential Language" thresholds.
   B. To reach the LEP community by county or service area, service providers could use several outreach methods, such as radio advertisements, television advertisements, newspaper advisements, and

presentations at community gatherings and at job fairs in designated languages.

C. LEP Program Contacts must receive LEP related statistics for determining "Essential Languages" and "Significant LEP Populations" applicable to each program area, section and field office under their jurisdiction. A combination of the most current external Census data and the comprehensive internal program language usage could be used as an effective assessment tool.

D. The LEP Program Committee will assist LEP Program Contacts in providing instructions to Managers in programs and offices meeting the "Essential Language" criteria mentioned above regarding the LEP Outreach Plan.

2. Development of an Outreach Plan

A. Service providers that meet the "Essential Language" threshold must submit a yearly Outreach Plan for identified LEP populations to the designated LEP Program Contact.

B. The LEP Plan must specify the outreach methods used for each "Significant LEP Population" and identify who is responsible for implementing each aspect of the Outreach Plan. The LEP Plan must identify potential partners who may be available to assist in the service of target populations, and the outreach methods used to contact these partners.

C. The development of the LEP Program Plan must take into consideration the demographic data obtained from the US 2000 Census and other public census data together with Labor and Industry's program service demographic data.

D. The LEP Program Plan must also include processes and methods to notify the LEP customers that language assistance is available at no cost for Labor and Industry's services.

E. The LEP Program Contact must review the LEP Program Plan submitted by programs under his/her jurisdiction for conformance with L&I's policy.

3. Reporting on Program Efforts

A. Each LEP Program Contact, whose area of responsibility includes programs and offices that reach the threshold for new "Essential Language and Significant LEP Populations" and thus require an LEP Program Plan, will deliver an LEP Assessment Report to the LEP Program Committee annually. The LEP Assessment report will describe the status or level of LEP services currently performed, and identify additional services required for full LEP compliance with Title VI.

IV. COMMUNICATION WITH LEP CUSTOMERS

1. Bilingual Services

Individuals who do not speak English or who are limited in their English proficiency (LEP Customer) may be unable to immediately obtain meaningful access to Labor and Industry's services. Thus, it is the policy of the Department of Labor and Industry that once the individual with LEP is identified, the Labor and Industry staff must contact a qualified bilingual person through the DGS Language Service Contract to assist that person as soon as possible.

2. Telephone Interpretation Services

A. Department of Labor and Industry staff must use the interpretation services provided through the DGS Language Contract "Language Line", if no other interpretation service is available in-house, for an "Essential Language", or for other languages needed for interaction with a customer. This language assistance is to take place within the same time frame that services are delivered to non-LEP customers.

Suggestions/Tips for Using Language Line

Commonwealth agencies may issue **BLANKET CONTRACT PURCHASE ORDERS** against this Contract. Such orders may cover all anticipated requirements for a set period of time (i.e. a month, quarter, or year.)

Explanation: This means that you can have a purchase order to cover one instance of service needed or a purchase order that will cover all services needed in a specified period of time. This period of time may not exceed 1 year.

The Contract for Over-the-Phone Interpreter Services for 3rd party non-English translation is Contract No. 9985-30 for all agencies.

Only one (1) Supplier has been awarded the Over-The-Phone Interpretation Services portion of this contract.

Explanation: The vendor is Language Line Services

Once you've identified the vendor that you would like to perform the needed services you must create your shopping cart. If you have any questions please contact the Office of Equal Opportunity at 717-787-1182.

B. Department of Labor and Industry staff serving customers must use "Language Identification Cards" to help identify the customer's language. Instructions on how and when to use the language identification card or "I-SPEAK" card will be available through the Department of General Service's Language Service contract and the Office of Equal Opportunity. An example of a language identification card is the yellow, tri-fold Language Line Card. All staff must have and make this card available to customers, so the customer is aware he/she

has a choice of languages. Staff should demonstrate to the customer how to use the card to point to his/her primary language. If a customer cannot identify a language on the card, then the staff person should call the Language Line for assistance. In using the Language Line for assistance, the staff person should remain on the line, and be available to read, in English, documents that require interpretation, including notices, administrative decisions, hearing decisions and questionnaires. The staff person should also remain available to answer questions. The Language identification card must be kept at the greeter/information counters in all field offices and at the Department of Labor and Industry's lobby.

C. Section and Field Office Managers and Administrators must promote and encourage the use of the Language Line to serve monolingual customers when no bilingual staff is available to assist those customers.

3. Written Communication

A. Multi-language insert to seek assistance: All written communication mailed to customers regarding benefits information, adjudication, or hearing decisions, will include a Language Service insert. The insert written in Arabic, Chinese, French, French Creole, German, Hindi, Italian, Korean, Polish, Portuguese, Russian, Spanish, and Vietnamese will be a notification instructing the customer to contact the Office if he/she does not understand the information sent.

B. Notification of Available Free Language Assistance: Notices regarding the availability for LEP customers to receive free interpretation and other language assistance for Department of Labor and Industry's services and programs must occur in the "Essential Languages", in brochures, pamphlets, manuals, and other materials disseminated to the public and to Department staff, as appropriate.

C. Translation and Interpretation Services Contract: **(BLANKET CONTRACT PURCHASE ORDERS)** Commonwealth agencies may issue Blanket Contract Purchase Orders against this Contract. Such orders may cover all anticipated requirements for a set period of time (i.e. a month, quarter, or year.)

Explanation: This means that you can have a purchase order to cover one instance of service needed or a purchase order that will cover all services needed in a specified period of time. This period of time may not exceed 1 year. Once you've identified the vendor that you would like to perform the needed services you must create your shopping cart. If you have any questions please contact this office.

Cheryl Kleeman, Procurement Manager
Department of Labor & Industry
Room 210, Labor & Industry Building
Phone: 717.783.0326
Fax: 717.787.0688

The designated LEP Program Contact will need to oversee the interpretation and translation services that are not performed by Department of Labor and Industry bilingual staff and that are needed and/or requested by individual programs and offices. Where the awarded contractor(s) agree(s) to provide language services to qualifying entities under Act 57, Workforce Investment Act Partners would be eligible to use the contract pricing upon award on a voluntary basis.

D. Preference of Oral Communication in the Customer's Language: It is the policy of the Department of Labor and Industry to interpret through staff members who were hired as bilingual employees; through employees who volunteer to serve as interpreters; or through the use of the DGS Language Services Contract, for limited English proficient customers as their first means of communication.

E. Maintaining a List of Translated Documents: The translation of written materials and forms needed to access the Department of Labor and Industry's services must be accomplished by using the above-mentioned federal 4-point guideline (Federal Register, Vol. 66, No.11, January 17, 2001). Several Labor and Industry's service providers have already translated many standard documents as required by law or determined to be necessary by the Department's Office of Equal Opportunity. A document (or the information it solicits) is "vital" or "essential depending upon the importance of the program, information, encounter, or service involved, and the consequence to the LEP person if the information in question is not provided accurately or in a timely manner. To determine when a document is "essential" or "Vital", programs and offices must carefully consider the services provided and the needs of individual programs, e.g.,

- Consent and complaint forms, Intake forms with the potential for important consequences
- Written notices of rights, denial, loss, or decreases in benefits or services, and other hearings
- Notices of disciplinary action
- Notices advising LEP persons of free language assistance
- Rule books/manuals
- Written tests that do not assess English language competency, but test competency for a particular license, job, or skill for which knowing English is not required
- Public participation hearings
- Community outreach
- Applications to participate in a program or activity or to receive benefits or services
- Customer satisfaction surveys, request forms, FAQs, Enrollment forms, Employer Recruitment List, Core Information Session descriptions, Training Account requirement forms, civil rights statement, WIA applicant signature page, approval to access

information (waiver of confidentiality), grievance and hearing procedure, application for Individual Training Account, selective service status, pre-application forms, Individual Employment Plan – Master Plan (ISS), Needs Payment Policy, Needs Payment Determination.

V. RECRUITMENT, HIRING AND USE OF BILINGUAL STAFF

1. Identification of Need for Bilingual Positions
   The Department of Labor and Industry's Bureau of Human Resources must coordinate with managers and administrators to ensure that the recruitment of bilingual staff takes place in a reasonable time frame.
   A. Managers and administrators must ensure that specific positions in central and field offices have been identified as being bilingual in the language(s) considered "essential" for the hiring office. "Identification of "Essential Languages" and Office Serving "Significant LEP Populations". Once the positions are identified, the bilingual requirement will be made a qualification for filling future openings of these positions.
   B. The Department's Bureau of Human Resources in coordination with the Office of Equal Opportunity will assist managers in the recruitment of designated bilingual positions.

VI. EMPLOYEE TRAINING IN LANGUAGE ASSISTANCE MATTERS

1. Training on Telephone Interpretation Services
   The LEP Program Contact must ensure that training is developed and delivered on a regular basis to all staff on the use and content of the Labor and Industry's language assistance policy to include the use of the Language Line, Language Identification Cards (I-Speak), and other language programs as they become available.
   A. Field office managers and administrators must ensure that all staff receives training at reasonable intervals on the use and content of the Labor and Industry's language assistance policy, language line, and other language programs.
   B. Field office managers and administrators must ensure that all new employees are trained on the use of the language line before they are allowed to provide these services.

2. Training on Language Assistance Policy
   The LEP Program Contact must ensure that all staff in their respective program(s) is properly trained with respect to this policy.

   The Bureau of Human Resources must ensure that this information is included as part of the Labor and Industry's new employee orientation program.

   The Office of Equal Opportunity will ensure that a "Limited English Proficiency" training module is developed and that training is delivered as part of the OEO Technical Assistance to field offices, programs, central office staff, and all LEP Program Contacts.

VII. MONITORING OF COMPLIANCE WITH LANGUAGE ASSISTANCE POLICY

1. Regular Monitoring and Annual Review of Language Assistance Policy
   The LEP Program Contacts must ensure that there is regular monitoring of the LEP Policy and that the individual LEP Program Plan submitted by offices and programs is revised annually.

   The LEP Program Contact and the Office of Equal Opportunity staff must ensure that the responsible parties at Pennsylvania CareerLinks (Site Administrators and EO Liaisons) and Local Workforce Investment Areas (EO Officers) receive training pertaining to:
   - The completion and maintenance of essential documents such as Individual Service Strategy Forms, Case Management Forms, Employment Plans, etc.
   - The accuracy of the translation and/or interpretation of essential documents to ensure that the LEP customer fully understands the document(s) he/she is required to sign.

2. Annual Assurance of Required Postings and Signs for Accessing Services
   Annually, LEP Program Contacts must survey field offices to ensure that the required signs are posted in lobbies and other public general areas in all "essential languages" identified for the respective service areas.

   The LEP Program Contacts must ensure that field offices are aware of which LEP related signs are required to be posted and that sufficient materials are available to field office managers and administrators for this purpose.

   Field office managers and administrators must ensure that all required signs are posted in areas visible to the public.

3. Review of Language Line and Voice Mail
   Annually, the LEP Program Contacts must review the use of the Language Line service and Voice Mail usage to ensure that all central and field offices are updated and in compliance with the LEP Program Policy.

4. LEP Compliance Report
   Annually, all sections and field offices must submit a final LEP Compliance Report to their respective LEP Program Contact. The report must include compliance verification of mandatory "Essential Language" posters, signage, material displays, staff awareness training, a list of all forms translated, services provided by language, and statistics of how many customers required translation or interpretation of any kind by language.

5. Language Assistance Complaint Review and Response
The Department of Labor and Industry will monitor complaints from the public related to the Department's provision of language services. The Department's Office of Equal Opportunity in coordination with the LEP Program Contacts will monitor language services complaints as well as the resolution of complaints in compliance with the Methods of Administration (MOA) approved by the US Department of Labor's Civil Rights Center (CRC).

VIII. FEDERAL AND STATE LAWS APPLIED IN THIS POLICY

29 CFR Part 37 Implementation of the Nondiscrimination and Equal Opportunity Provisions of the Workforce Investment Act of 1998. Section 188 of WIA "prohibits discrimination on the grounds of race, color, religion, sex, national origin, age, disability, political affiliation or belief, and for beneficiaries only, citizenship or participation in a WIA Title I-financially assisted program or activity".

Title VI, Civil Rights Act of 1964-No person in the United States shall, on the grounds of race, color, or national Origin, be excluded from participation in, be denied the benefits of, or be subjected to discrimination under any program or activity receiving Federal financial assistance.

Federal Register/Vol. 68, No. 103 - Civil Rights Center; Policy Guidance to Federal Financial Assistance Recipients Regarding the Title VI Prohibition Against National Origin Discrimination Affecting Limited English Proficient Persons.

Title VII of the Civil Rights Act of 1964 (a) It shall be an unlawful employment practice for an employer to (1) fail or refuse to hire or to discharge any individual, or otherwise discriminate against any individual with respect to his/her compensation, terms, conditions, or privileges of employment, because of such individual's race, color, religion, sex, or national origin."

CONTACT INFORMATION

FEDERAL
US Department of Labor
Civil Rights Center
Frances Perkins Building, Room N-4123
200 Constitution Avenue NW
Washington, DC 20210

US Department of Justice
Coordination and Review Section
Civil Rights Division
P.O. Box 66560
Washington, DC 20034-6560

STATE
Department of Labor and Industry
Office of Equal Opportunity
Labor and Industry Building, Room 514
Seventh and Forster Streets
Harrisburg, Pennsylvania 17120
1-800-622-5422, (717) 787-1182
TTY 1-800-654-5984

ADMINISTRATIVE POLICIES AND PROCEDURES
State of Pennsylvania
Department of Labor and Industry

Language Assistance Policy

Yearly Timeline for LEP Activities
LEP Program Year - July 1 to June 30

Due Date	Due From	Activity
June 2006	LEP Program Contact	LEP Program Contact determines language needs applicable to each program area or office under his/her jurisdiction, based on 2002 Census and PA DOE statistics
July 2006	LEP Program Contact	Referencing Language needs data: • Sends instruction for LEP Programs Plan to Managers in sections/offices that meet the Language Needs criteria • Sends instructions for LEP Compliance Assessments to managers in sections/offices not meeting the language needs criteria
August 2006	Managers meeting or exceeding the language needs criteria	Develop DRAFT LEP Program Plan and Deliver to LEP Program Contact for review and initial approval
September 2006	LEP Program Contact	Review and initially approve LEP Program Plans or return document to Managers for additional information that will support and facilitate outreach activities and service delivery
September 2006	LEP Program Contact	Forward initially approved LEP Program Plan to LEP Committee for review and input (including section report on mandatory posters and staff training)
December 2006	LEP Committee	In light of LEP requirements, review draft LEP Program Plan and forward it to LEP Program Contact with recommendations (including section report on mandatory posters and staff training)
February 2007	LEP Program Contact	Modify LEP Program Plan based on recommendations/suggestions made by the LEP Committee and forward LEP Program Plan to next level for approval
March 2007	LEP Program Contact	Sends letter of approval along with the LEP Program Plan to originators (managers, administrators, section chiefs)
April 2007	LEP Program Contact	Submit to OEO an end of fiscal year LEP activities report based on outreach activities and service delivery by programs under his/her jurisdiction

MONITORING PROCESS

The Office of Equal Opportunity's monitoring responsibilities for programs under the Department of Labor and Industry's jurisdiction pertaining to language access activities include the following:

MONTHLY

- Meeting with LEP Program Contacts to review individual program plans, training modules, and other compliance efforts related to language access.
    - Assisting in the reviewing of draft documents, bulletins, taglines, electronic communications and procedures related to language access statewide in conformance with LEP requirements.
    - Addressing issues identified through monitoring and recommending solutions.
    - Reporting on individual programs' achievements and accomplishments to encourage a uniform implementation of LEP requirements statewide.
    - Distributing meeting minutes to appropriate management staff, Office of Equal Opportunity Director and Program Office LEP Contact Persons.

ON-GOING

- Gathering and sharing best practices among program offices under the L&I's jurisdiction to increase consistency in the implementation of LEP requirements.
- Providing technical assistance training on LEP language access requirements to program administrators and managers, Equal Opportunity officers and liaisons, and program office LEP contact persons as needed.

(Double-Click the slide to show a PowerPoint presentation)

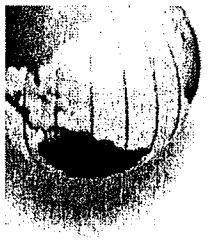

The Department of Labor and Industry
OFFICE OF EQUAL OPPORTUNITY

Limited English Proficiency Overview

LIMITED ENGLISH PROFICIENT POPULATION IN PENNSYLVANIA

(U.S. CENSUS 2000)

Language	Pennsylvania
5 years and older	11,555,538
Speak only English	10,583,054
Speak other Language	972,484
Spanish and Spanish Creole	356,754
Other Indo-European Languages	428,122
French (includes Patois, Cajun)	47,735
French Creole	4,782
Italian	70,434
Portuguese or Portuguese Creole	8,346
German	68,672
Yiddish	5,444
Other West Germanic Languages	51,073
Scandinavian Languages	3,318
Greek	17,348
Russian	32,189
Polish	31,717
Serbo-Croatian	8,648
Other Slavic Languages	24,423
Armenian	2,271
Persian	3,703
Gujarathi	8,957
Hindi	10,045
Urdu	5,064
Other Indic Languages	12,297
Other Indo-European Languages	11,656
Asian and Pacific Island Languages	143,955
Chinese	42,790
Japanese	7,202
Korean	25,978
Mon-Khmer, Cambodian	8,710
Miao, Hmong	880
Thai	2,067
Laotian	2,249
Vietnamese	25,880
Other Asian Languages	16,196
Tagalog	9,604
Other Pacific Island Languages	2,399
Other Languages	43,653
Navajo	41
Other Native North American Languages	1,190
Hungarian	6,166
Arabic	19,557
Hebrew	5,918
African Languages	9,673
Other and Unspecified Languages	1,108

Source: US Census Bureau, Census 2000, Summary File 3, Table PCT10
Internet Release Data: February 25, 2003

PENNSYLVANIA LANGUAGE ACCESS PROVIDER FOR TRANSLATION AND INTERPRETATION SERVICES

Attention all Requisitioners:

The new DGS contract for (Non-English) Translation and Interpreter Services is finally in effect. The attached pdf document is the contract as it appears on the DGS website. Open the attachment and view the bookmarks down the left hand side. There are Item Sheets for each vendor that is part of this contract. Those item sheets provide you with the contact information for each vendor plus the costs for the services. If the price is noted as $0.00 then look at the separate price sheet which will show the various languages plus the corresponding prices for translation and interpreting services.

To purchase these services you should start by reviewing the attachment. Please take the time to read the Special Contract Terms and Conditions. There is important information contained within the terms and conditions. I have highlighted a few below with a brief explanation.

BLANKET CONTRACT PURCHASE ORDERS: Commonwealth agencies may issue Blanket Contract Purchase Orders against this Contract. Such orders may cover all anticipated requirements for a set period of time (i.e. a month, quarter, or year.)

> ***Explanation***: This means that you can have a purchase order to cover one instance of service needed or a purchase order that will cover all services needed in a specified period of time. This period of time may not exceed 1 year.

The Contract for Over-the-Phone Interpreter Services for 3rd party non-English translation is Contract No. 9985-30 for all agencies Over-the-Phone translation service.

Only one (1) Supplier has been awarded the Over-The-Phone Interpretation Services portion of this contract.

> ***Explanation***: The vendor is Language Line Services

Once you've identified the vendor that you would like to perform the needed services you must create your shopping cart. If you have any questions please contact this office. Thank you.

Cheryl Kleeman
Procurement Manager
Department of Labor & Industry
Room 210 Labor & Industry Building
Phone: 717.783.0326
Fax: 717.787.0688

LEP Contract below: *Please open to access cost, terms and other important information concerning vendors.*

9985-30.pdf

INTERPRATION &TRANSLATION

Leland E. Scott, Jr., Commodity Specialist
Commonwealth of Pennsylvania
Department of General Services
Bureau of Procurement, Services Division
555 Walnut Street, 6th Floor
Harrisburg, PA 17101-1914
Phone: (717) 787-7526
Fax: (717) 214-9505
Email: LeScott@state.pa.us <mailto:LeScott@state.pa.us>

This message contains privileged and confidential information intended for the above addressees only. If you receive this message in error please delete or destroy this message and any accompanying documentation after contacting the sender. The sender of this message will fully cooperate in the civil and criminal prosecution of any individual engaging in the unauthorized use of this message. (Remain in red)

LEP VENDORS

Please open to access names, telephone numbers and other important information concerning vendors.

9985-30 Contractor List.xls

9985-30 Item Sheets.xls

"I Speak Card"

2004 Census Test — United States Census 2010

LANGUAGE IDENTIFICATION FLASHCARD

☐ ضع علامة في هذا المربع إذا كنت تقرأ أو تتحدث العربية.	1. Arabic
☐ Խնդրում ենք նշում կատարեք այս քառակուսում, եթե խոսում կամ կարդում եք հայերեն:	2. Armenian
☐ যদি আপনি বাংলা পড়েন বা বলেন তা হলে এই বাক্সে দাগ দিন।	3. Bengali
☐ ណូមបញ្ជាក់ក្នុងប្រអប់នេះ បើអ្នកអាន ឬនិយាយភាសា ខ្មែរ ។	4. Cambodian
☐ Motka i kahhon ya yangin ûntûngnu' manaitai pat ûntûngnu' kumentos Chamorro.	5. Chamorro
☐ 如果你能读中文或讲中文，请选择此框。	6. Simplified Chinese
☐ 如果你能讀中文或講中文，請選擇此框。	7. Traditional Chinese
☐ Označite ovaj kvadratić ako čitate ili govorite hrvatski jezik.	8. Croatian
☐ Zaškrtněte tuto kolonku, pokud čtete a hovoříte česky.	9. Czech
☐ Kruis dit vakje aan als u Nederlands kunt lezen of spreken.	10. Dutch
☐ Mark this box if you read or speak English.	11. English
☐ اگر خواندن و نوشتن فارسي بلد هستيد، اين مربع را علامت بزنيد.	12. Farsi

DB-3309

U.S. DEPARTMENT OF COMMERCE
Economics and Statistics Administration
U.S. CENSUS BUREAU

☐ Cocher ici si vous lisez ou parlez le français.	13. French
☐ Kreuzen Sie dieses Kästchen an, wenn Sie Deutsch lesen oder sprechen.	14. German
☐ Σημειώστε αυτό το πλαίσιο αν διαβάζετε ή μιλάτε Ελληνικά.	15. Greek
☐ Make kazye sa a si ou li oswa ou pale kreyòl ayisyen.	16. Haitian Creole
☐ अगर आप हिन्दी बोलते या पढ़ सकते हों तो इस बक्स पर चिह्न लगाएँ।	17. Hindi
☐ Kos lub voj no yog koj paub twm thiab hais lus Hmoob.	18. Hmong
☐ Jelölje meg ezt a kockát, ha megérti vagy beszéli a magyar nyelvet.	19. Hungarian
☐ Markaam daytoy nga kahon no makabasa wenno makasaoka iti Ilocano.	20. Ilocano
☐ Marchi questa casella se legge o parla italiano.	21. Italian
☐ 日本語を読んだり、話せる場合はここに印を付けてください。	22. Japanese
☐ 한국어를 읽거나 말할 수 있으면 이 칸에 표시하십시오.	23. Korean
☐ [illegible]	24. Laotian
☐ Prosimy o zaznaczenie tego kwadratu, jeżeli posługuje się Pan/Pani językiem polskim.	25. Polish

U.S. DEPARTMENT OF COMMERCE
Economics and Statistics Administration
U.S. CENSUS BUREAU

☐ Assinale este quadrado se você lê ou fala português.	26. Portuguese
☐ Însemnaţi această căsuţă dacă citiţi sau vorbiţi româneşte.	27. Romanian
☐ Пометьте этот квадратик, если вы читаете или говорите по-русски.	28. Russian
☐ Обележите овај квадратић уколико читате или говорите српски језик.	29. Serbian
☐ Označte tento štvorček, ak viete čítať alebo hovoriť po slovensky.	30. Slovak
☐ Marque esta casilla si lee o habla español.	31. Spanish
☐ Markahan itong kuwadrado kung kayo ay marunong magbasa o magsalita ng Tagalog.	32. Tagalog
☐ ให้กาเครื่องหมายลงในช่องถ้าท่านอ่านหรือพูดภาษาไทย.	33. Thai
☐ Maaka 'i he puha ni kapau 'oku ke lau pe lea fakatonga.	34. Tongan
☐ Відмітьте цю клітинку, якщо ви читаєте або говорите українською мовою.	35. Ukranian
☐ اگر آپ اردو پڑھتے یا بولتے ہیں تو اس خانے میں نشان لگائیں۔	36. Urdu
☐ Xin đánh dấu vào ô này nếu quý vị biết đọc và nói được Việt Ngữ.	37. Vietnamese
☐ באצייכנט דעם קעסטל אויב איר לייענט אדער רעדט אידיש.	38. Yiddish

U.S. DEPARTMENT OF COMMERCE
Economics and Statistics Administration
U.S. CENSUS BUREAU

FREQUENTLY ASKED QUESTIONS

Frequently Asked Questions

Q. Who is a Limited English Proficient (LEP) individual?

A. Individuals who do not speak English as their primary language and who have a limited ability to read, speak, write, or understand English can be limited English proficient, or "LEP." These individuals may be entitled language assistance with respect to a particular type or service, benefit, or encounter.

Q. What are the relevant laws concerning language access for LEP individuals?

A. Federal laws particularly applicable to language access include Title VI of the Civil Rights Act of 1964, and the Title VI regulations, prohibiting discrimination based on national origin, and Executive Order 13166 issued in 2000. Many individual federal programs, states, and localities also have provisions requiring language services for LEP individuals.

Q. What is Executive Order 13166?

A. An Executive Order is an order given by the President to federal agencies. The LEP Executive Order (Executive Order 13166) says that people who are LEP should have meaningful access to federally conducted and federally funded programs and activities.

Executive Order 13166 requires all agencies that provide federal financial assistance to issue guidance on how recipients of that assistance can take reasonable steps to provide meaningful access consistent with Title VI and the Title VI regulations. The Order also requires that federal agencies

create plans for ensuring that their own activities also provide meaningful access for persons who are LEP.

More information on Executive Order 13166 can be found at Executive Order 13166: Improving Access to Services for Persons with Limited English Proficiency.

Q. What is a recipient of federal financial assistance?

A. Federal financial assistance includes grants, training, use of equipment, donations of surplus property, and other assistance. Subrecipients are also covered, when federal funds are passed from one recipient to a subrecipient. Recipients of federal funds range from state and local agencies, to nonprofits and other organizations. A list of the types of recipients and the agencies funding them can be found at Executive Order 12250 Coordination of Grant-Related Civil Rights Statutes.

Title VI covers a recipient's entire program or activity. This means all parts of a recipient's operations are covered. This is true even if only one part of the recipient receives the federal assistance.

> ***Example:*** *DOJ provides assistance to a state department of corrections to improve a particular prison facility. All of the operations of the entire state department of corrections--not just the particular prison--are covered.*

More information on Title VI, generally, can be found at Title VI of the Civil Rights Act of 1964 42 U.S.C. § 2000d et seq. .

Q. What is a federally conducted activity?

A. All federal agencies subject to Executive Order 13166 must design and implement a federally conducted plan to ensure access for LEP individuals to all of its federally conducted programs and activities (basically, everything that it does). For instance, the Civil Rights Division of the U.S. Department of Justice has a plan for ensuring meaningful access to its

programs and activities for LEP persons. Other agencies and parts of agencies must do the same.

Q. Who will enforce the LEP rules?

A. Most federal agencies have an office that is responsible for enforcing Title VI of the Civil Rights Act. To the extent that a recipient's actions are inconsistent with their obligations under Title VI, then such agencies will take the necessary corrective steps.

The Coordination and Review Section of the Civil Rights Division of DOJ has taken the lead in coordinating and implementing this Executive Order.

Q. What are recipients of federal funds and federal agencies required to do to meet LEP requirements?

A. Recipients and federal agencies are required to take reasonable steps to ensure meaningful access to their programs and activities by LEP persons. While designed to be a flexible and fact-dependent standard, the starting point is an individualized assessment that balances the following four factors:

1. The number or proportion of LEP persons eligible to be served or likely to be encountered by the program or grantee;
2. the frequency with which LEP individuals come in contact with the program;
3. the nature and importance of the program, activity, or service provided by the program to people's lives; and
4. the resources available to the grantee/recipient or agency, and costs. As indicated above, the intent of this guidance is to find a balance that ensures meaningful access by LEP persons to critical services while not imposing undue burdens on small business, or small nonprofits.

Q. Do recipients of federal funds have to submit written language access plans to the Department of Justice or to their federal funding agency each year?

A. No. While planning is an important part of ensuring that reasonable steps are taken to provide meaningful access to LEP individuals seeking

services, benefits, information, or assertion of rights, there is no blanket requirement that the plans themselves be submitted to federal agencies providing federal financial assistance. In certain circumstances, such as in complaint investigations or compliance reviews, recipients may be required to provide to federal agencies a copy of any plan created by the recipient.

WORKFORCE INVESTMENT ACT

NONDISCRIMINATION AND EQUAL OPPORTUNITY SELF-EVALUATION GUIDE

Prepared By
Federal Programs Unit
Office of Equal Opportunity
Department of Labor and Industry

Equal Opportunity Employer. Auxiliary aids and services are available upon request to individuals with disabilities. Requests for services, aids, and/or alternate formats need to be made by calling 800-622-5422 (voice). TTY 800-654-5984.

7/13/12

NONDISCRIMINATION AND EQUAL OPPORTUNITY
SELF-EVALUATION GUIDE

BACKGROUND AND INSTRUCTIONS

Authority

Section 188 of the Workforce Investment Act (WIA) and Title 29 of the Code of Federal Regulations (CFR) Part 37 set forth the authority of the Civil Rights Center (CRC), U.S. Department of Labor to monitor all recipients of financial assistance under the WIA to determine whether they are complying with its provisions and in compliance with Section 504 and Section 508 of the Rehabilitation Act of 1973, as amended, and the Americans with Disabilities Act (ADA) of 1990.

Purpose

As part of the overall program for monitoring Local Workforce Investment Areas' (LWIA) compliance with Section 188 of the WIA and Title 29 CFR Part 37, the OEO requires that the LWIAs, PA CareerLinks® and Unemployment Compensation (UC) Service Centers complete and submit to the OEO the Nondiscrimination and Equal Opportunity (NEO) Self-Evaluation Guide (SEG) and its Physical and Program Access addendum every three (3) years. Additionally, the Physical and Program Access Addendum when there is a physical relocation or significant structural modification. The OEO staff will review the submitted self-evaluations and use the results as one of the tools in determining and assessing the level of compliance with the related regulations. Through self-evaluations, LWIAs, PA CareerLinks®, and UC Service Centers (UCSC) can identify both the compliance status of their programs and the areas in which they need technical assistance to implement appropriate corrective action.

Background

The OEO developed the NEO SEG to meet the State of Pennsylvania's oversight responsibility to ensure subgrantee compliance with the WIA and other applicable requirements cited above. In order to ensure that discriminatory practices against people with disabilities are identified and corrected, the Physical and Program Access (PPA) Self-Assessment Checklist was developed to help LWIAs, PA CareerLinks®, and UC Service Centers identify areas in need of corrective action.

OEO has developed the Pennsylvania PPA Self-Assessment Process as an addendum to the NEO SEG. This document was developed collaboratively by representatives from State partner entities from the Office of Equal Opportunity, the Bureau of Workforce Development Partnership, the Office of Unemployment Compensation Benefits, the State Workforce Investment Board, The Office of Vocational Rehabilitation (including the Office for the Deaf and Hard of Hearing) and Local Workforce Investment Boards.

The NEO SEG identifies nine major NEO elements mirroring the state Methods of Administration (MOA), each of which, when fully implemented, will help ensure that the subgrantee is satisfactorily complying with applicable nondiscrimination provisions. The nine NEO elements are:

1. Designation of local level Equal Opportunity (EO) Officer
2. Notice and Communication of EO Policies and Procedures
3. Equal Opportunity Provisions and Nondiscrimination Assurances in all Contracts, Plans, and Agreements
4. Universal Access to WIA Title-I Financially Assisted Programs and Activities
5. Discriminatory Practices Prohibited Against Individuals with Disabilities
6. Collection and Maintenance of EO Data
7. Monitor Service Providers for Compliance
8. Complaint Processing Procedures
9. Corrective Actions/Sanctions

The PPA Self-Assessment Checklist is divided into nine broad access elements that cover the basics of both physical and program access requirements. The checklist supplements Element 5 of the NEO SEG and the MOA. The access elements are:

1. Integrated Programs
2. Accessible Approach & Entrance
3. Access to Programs and Services
4. Usability of Toilet Rooms
5. Additional Access
6. Communications
7. Emergency Evacuation
8. Staff Development
9. Access to Public Meetings

NEO Self-Evaluation Guide Instructions

The LWIA, PA CareerLink®, or UC Service Center completes three sections for each of the nine elements, utilizing the following instructions.

Section A. (Responses)

Answer each question by indicating yes, no, or partially. A "partially" response indicates that some, but not all, portions of the item are complete. Legal citations identified in the References column may be read for additional background and information. Although supporting documentation need not accompany the self-evaluation when it is submitted to the OEO, such documentation must be kept on file at the LWIA, PA CareerLink®, or UC Service Center. This documentation may be requested in lieu of, or during, on-site reviews conducted by the OEO.

Section B. (Deficiencies)

Summarize any deficiencies found when completing the self-evaluation. A "no" or "partially" response should be addressed here by briefly stating the areas found to be deficient. Only the deficient areas should be described. If there are no deficiencies in Section A, this page does not need to be returned.

Section C. (Corrective Action)

Describe the corrective action taken, or planned to be taken, to rectify each deficiency cited in Section B. Along with the corrective action, state the estimated time frame for accomplishing the corrective action. Again, if there are no deficiencies in Section A, this page does not need to be returned.

PPA Self-Assessment Checklist Instructions

The LWIA, PA CareerLink®, or UC Service Center is asked to complete the questions and possible solutions for each of the nine elements and sub-elements, utilizing the following instructions.

The first column lists all of the elements and sub-elements. The sub-elements are listed as questions, which require simple "yes" or "no" answers.

The second column provides possible solutions if the answer in column one is "no."

Please answer all questions contained in the Checklist. As applicable, the "possible solutions" should be checked, and additional information provided as appropriate.

Submission Instructions

There may be some components of both the NEO SEG and the PPA Self-Assessment Checklist, which are addressed by questions that may appear to be similar, but are, in fact, directed at different entities (i.e., the LWIA. PA CareerLink®, or UC Service Center). Both the guide and the checklists must be completed in their entirety.

The LWIA is responsible for completing and submitting the following items:

- ❑ NEO Self-Evaluation Guide
- ❑ PPA Self-Assessment:Addendum – Part 1
  - ❑ Section C – Combined Physical/Program Access Checklist
  - ❑ Section D – Corrective Action Plan

Packages should be submitted by **DATE** to:

Office of Equal Opportunity
651 Boas Street, Room 514
Harrisburg, PA 17112

Copies of all forms completed by the LWIA, PA CareerLink®, or UC Service Center (including the NEO Self-Evaluations, the PPA Self-Assessments, and the PPA Corrective Action Plan) must be kept on file locally to allow for any later inspection that may be required by authorized State and Federal Reviewers.

Office Designation: _____

Executive Director/Manager/Administrator: _____

Name of Staff Completing EO Guide: _____

Telephone Number: _____

Date Guide Completed: _____

SECTION A: RESPONSES

REFERENCE	ITEMS	RESPONSE		
		Yes	No	Partially
WIA SECTION 188 29 CFR PART 37 §37.23 §37.24 §37.25 §37.26 §37.27 §37.28 §37.54	1. Has the LWIA/PA CareerLink®/UCSC designated an Equal Opportunity (EO) Officer/Liaison? Name _____ Title _____ Address _____ City _____ Zip Code _____ Telephone (_____)_____ TDD/TTY(_____)_____			
	2. Has the name, title/position, address, and telephone number of the EO Officer/Liaison been made public at the local level?			
	3. If yes, does this information appear on internal and external communications about the LWIA's/ PA CareerLinks®/UCSC's nondiscrimination and EO programs?			
	4. Is the EO Officer/Liaison a senior-level employee?			
	5. Does the EO Officer/Liaison receive periodic training on EO requirements and regulations?			
	6. Does he/she have access to top level administrators?			
	7. **LWIA Only**: Do the EO Officer's responsibilities include:			
	a. Serving as the LWIA's liaison with CRC;			
	b. Monitoring and investigating the LWIA's activities, and the activities of its subrecipients to ensure compliance with nondiscrimination and EO obligations under WIA Title I;			
	c. Reviewing the LWIA's written policies to ensure that they are nondiscriminatory;			
	d. Developing and publishing the LWIA's procedures for processing discrimination complaints under §37.76 through §37.79, and ensuring that those procedures are followed;			
	e. Reporting directly to the appropriate official (including, but not limited to, the State WIA Director, State Employment Security Agency Administrator, or LWIA grant recipient) about EO matters; and			
	f. Undergoing training (at the LWIA expense) to maintain competency, if the Director requires him or her, and/or his or her staff, to do so?			

SECTION B: DEFICIENCIES

SECTION C: CORRECTIVE ACTION

COMMUNICATION OF EQUAL OPPORTUNITY POLICIES AND PROCEDURES

SECTION A: RESPONSES

REFERENCE	ITEMS	RESPONSE		
		Yes	No	Partially
WIA SECTION 188 **29 CFR PART 37** **§37.5** **§37.11** **§37.20** **§37.26** **§37.29** **§37.30** **§37.31** **§37.32** **§37.33** **§37.34** **§37.35** **§37.36** **§37.54**	1. Does the LWIA/ PA CareerLink®/UCSC have a written nondiscrimination and EO policy and notice that:			
	a. Makes a commitment to provide equal opportunities?			
	b. Prohibits discrimination on the grounds of: (1) race; (2) color; (3) religion; (4) sex; (5) national origin; (6) age; (7) disability; (8) political affiliation or belief, and (9) citizenship/status as a lawfully admitted immigrant authorized of any beneficiary or programs funded under Title I of the WIA of 1998?			
	c. Prohibits retaliation or reprisal against an individual that: (1) Has filed a complaint; (2) Opposed a practice prohibited by the nondiscrimination and EO provisions of WIA; (3) Furnished information to, or assisted or participated in any manner in, an investigation, review, hearing, or any other activity related to the administration of the WIA nondiscrimination and EO provisions; and (4) Otherwise exercised any rights and privileges under the WIA nondiscrimination and EO provisions?			
	2. Has the LWIA/PA CareerLink®/UCSC set up a system to communicate its EO policy?			
	3. Does the LWIA/PA CareerLink®/UCSC have staff who are knowledgeable of and trained concerning their EO responsibilities?			

COMMUNICATION OF EQUAL OPPORTUNITY POLICIES AND PROCEDURES

SECTION A: RESPONSES

REFERENCE	ITEMS	RESPONSE		
		Yes	No	Partially
WIA SECTION 188 **29 CFR PART 37** **§37.5** **§37.11** **§37.20** **§37.26** **§37.29** **§37.30** **§37.31** **§37.32** **§37.33** **§37.34** **§37.35** **§37.36** **§37.54**	4. Does the LWIA's/PA CareerLink's®/UCSC's EO policy, at a minimum, specify that it will give initial and continuing notice that it does not discriminate to: a. Applicants/registrants; b. Eligible applicants/registrants; c. Participants; d. Applicants for employment; e. Employees; f. Unions or professional organizations holding collective bargaining or professional agreements with the LWIA; g. Sub-recipients of WIA Title I Funds; h. Members of the public, including those with impaired vision or hearing?			
	5. Is the recipient taking appropriate steps to insure that communications with individuals with disabilities are as effective as communication with others? (For example, Are Computer Assisted Real-Time Transcription (CART) Reporters qualified and understand confidentiality requirements? Is assistive technology available for individuals who are hard of hearing such as Assistive Listening Devices (ALDs)?			
	6. Does the LWIA/PA CareerLink®/UCSC ensure that translators and/or interpreters are qualified to provide interpreting services and understand any confidentiality requirements?			
	7. Does the LWIA's/PA CareerLink's®/UCSC's "Equal Opportunity is the Law" notice contain the specific wording required by Title 29 CFR §37.30?			
	8. Has the notice been: a. Posted in prominent numbers and locations at the LWIA?			
	b. Disseminated in the form of internal LWIA/PA CareerLink®/UCSC memoranda and other written or electronic communication?			
	c. Included in handbooks or manuals?			
	d. Given to each participant and a copy of the notice placed in each participant's file?			
	e. Provided to service providers who are under contract to the LWIA/PA CareerLink®/UCSC?			
	f. Made available in formats that effectively communicate its message to individuals with visual impairments?			

SECTION A: RESPONSES

REFERENCE	ITEMS	RESPONSE		
		Yes	No	Partially
WIA SECTION 188 **29 CFR PART 37** **§37.9** **§37.29** **§37.30** **§37.31** **§37.32** **§37.34** **§37.35** **§37.54**	g. Where the Notice has been given in an alternate format (i.e., for visually impaired customers), is a record that such notice has been given made a part of that participant's file?			
	9. Do recruitment materials that are distributed to the public state that the programs or activities are "equal opportunity employer/programs" and that "auxiliary aids and services are available upon request to individuals with disabilities?"			
	a. Where a phone number is listed, is there a TDD/TTY, relay service or video relay service number listed?			
	b. Are recruitment materials printed in a language other than English where a significant portion of the eligible population speaks a language other than English?			
	10. Has the LWIA/PA CareerLink®/UCSC developed a written policy regarding effective communication with persons of Limited English Proficiency (LEP) to meet EO requirements?			
	11. Does the LWIA/PA CareerLink inform subcontractors of their obligation to provide language assistance to LEP individuals to whom they give services or enroll in programs and activities?			
	12. Does the LWIA/PA CareerLink/UCSC provide its new participants and new employees with an orientation to inform them of their nondiscrimination and equal opportunity rights, including the right to file a complaint?			

SECTION B: DEFICIENCIES

SECTION C: CORRECTIVE ACTION

SECTION A: RESPONSES

REFERENCE	ITEMS	RESPONSE		
		Yes	No	Partially
WIA SECTION 188	**This Section for LWIA Only**			
29 CFR PART 37 §37.20 §37.21 §37.54	1. Has the LWIA implemented a system to ensure that all grants, cooperative agreements, contracts, job training plans, and policies and procedures entered into with respect to the operation of the LWIA's WIA Title 1-funded programs or activities contain the assurances as specified in Title 29 CFR, §37.20?			
	2. Do the LWIA's assurances state that the LWIA will "comply fully with the nondiscrimination and equal opportunity provisions" of WIA and acknowledge the government's right to seek judicial enforcement of the nondiscrimination assurance?			

SECTION B: DEFICIENCIES

SECTION C: CORRECTIVE ACTION

SECTION A: RESPONSES

REFERENCE	ITEMS	RESPONSE		
		Yes	No	Partially
WIA SECTION 188 29 CFR PART 37 §37.7 §37.8 §37.9 §37.10 §37.42 §37.54	1. Has the LWIA/PA CareerLink®/UCSC taken appropriate steps to ensure that it provides universal access to its programs and activities?			
	2. Does the LWIA's/PA CareerLink's®/UCSC's recruitment efforts ensure that the pool of individuals considered for participation in programs and activities includes members of both sexes, various race and ethnicities, age groups, and individuals with disabilities?			
	3. Is the LWIA's/PA CareerLink's®/UCSC's hiring process accessible to applicants with disabilities?			
	4. Does the LWIA/PA CareerLink® ensure that facilities utilized by the LWIA/PA CareerLink® for WIA services are designed to provide reasonable access to individuals with disabilities in the following areas: a. Training; b. Job structure; c. Work schedule; d. Work procedure; and e. Work equipment and auxiliary aids accommodations?			

SECTION B: DEFICIENCIES

SECTION C: CORRECTIVE ACTION

DISCRIMINATORY PRACTICES PROHIBITED AGAINST INDIVIDUALS WITH DISABILITIES

SECTION A: RESPONSES

REFERENCE	ITEMS	RESPONSE		
		Yes	No	Partially
WIA SECTION 188 The Rehabilitation Act of 1973, §504 Pennsylvania Building Code, Title 24 §1117	FOR LWIA/PA CareerLink Only 1. Does the recipient prohibit discrimination in the registration for and the provision of aid, benefits, services or training, including core, intensive, training, and support services, on the basis of disability, including the types of discrimination listed in 29 CFR 37.7?			
29 CFR PART 32 29 CFR PART 37 §37.4 §37.5 §37.7 §37.8 §37.9 §37.10 §37.37 §37.41 §37.54	2. Does the recipient insure that in providing any aid, benefits, services, or training, a recipient does not deny the opportunity to participate in or benefit from the aid, benefits, services, or training; afford an opportunity that is not equally effective; provide different, segregated or separate aid, benefits, services, or training unless such actions are necessary to provide effective opportunity; deny the opportunity to participate as a member of planning or advisory boards; or otherwise limit enjoyment of any right, privilege, advantage, or opportunity enjoyed by others?			
	3. Does the recipient insure it does not aid or perpetuate discrimination by providing significant assistance to a person or an entity that discriminates on the basis of disability?			
	4. Does the recipient insure it does not deny the opportunity to participate in WIA Title I-financially assisted programs or activities despite the existence of permissibly separate programs or activities?			
	5. Does the recipient administer its programs and activities in the most integrated setting appropriate?			
	6. Does the recipient insure it does not use standards, procedures, criteria or administrative methods that have the purpose or effect of discrimination; defeating or substantially impairing the accomplishment of the objectives of the WIA Title I-financially assisted programs or activities; or perpetuating discrimination of another entity if both entities are subject to common administrative control?			
	7. Does the recipient, in the selection of contractors, insure it does not use discriminatory criteria?			
	8. Does the recipient insure it does not impose or apply eligibility criteria that screen out or tend to screen out an individual with a disability or class of individuals with disabilities unless such criteria can be shown to be necessary for the provision of the aid, benefit, service, training, program or activity being offered?			

DISCRIMINATORY PRACTICES PROHIBITED AGAINST INDIVIDUALS WITH DISABILITIES

SECTION A: RESPONSES

REFERENCE	ITEMS	RESPONSE		
		Yes	No	Partially
	9. Does the recipient reject all job orders from any employer that specifies that it will not accept applications from qualified persons with disabilities or from qualified applicants with certain disabilities?			
	10. Does the recipient provide reasonable accommodations regarding registration for and the provision of aid, benefits, services or training, including core, intensive, training, and support services to qualified individuals with disabilities?			
	11. Does the recipient provide reasonable modifications regarding its policies, practices, and procedures for the registration for and provision of core, intensive, training, and support services to individuals with disabilities?			
	12. Does the recipient administer its programs and activities in the most integrated setting appropriate to the needs of qualified individuals with disabilities?			
	13. Does the recipient not provide different, segregated, or separate aid, benefits, services, or training to individuals with disabilities or any class of individuals with disabilities unless such action is necessary to provide qualified individuals with disabilities with aid, benefits, services, or training that are as effective as those provided to others?			
	14. Does the recipient permit a qualified individual with a disability the opportunity to participate in WIA Title I-financially assisted programs and activities despite the existence of permissibly separate or different programs or activities (For example, do OVR customers have the opportunity to participate in Title I-financially assisted programs or activities even when the same or similar programs are available through OVR.)?			
	15. Are steps being taken to ensure that communications with individuals with disabilities are as effective as communications with others?			
	16. Does the recipient furnish appropriate auxiliary aids and services where necessary to afford individuals with disabilities an equal opportunity to participate in, and enjoy the benefits of, the WIA Title I-financially assisted program or activity?			
	17. Has the LWIA/PA CareerLink® established a methodology for insuring the confidentiality of medical information provided by participants and applicants for employment?			

SECTION B: DEFICIENCIES

SECTION C: CORRECTIVE ACTION

COLLECTION AND MAINTENANCE OF EQUAL OPPORTUNITY DATA

SECTION A: RESPONSES

REFERENCE	ITEMS	RESPONSE		
		Yes	No	Partially
WIA SECTION 188 **20 CFR PART 652 §663.105(c)** **29 CFR PART 37 §37.11 §37.37 §37.39 §37.41 §37.54**	1. Has the LWIA/PA CareerLink®/UCSC implemented a system to collect and maintain records and data necessary to determine its compliance with nondiscrimination and EO provisions?			
	a. Is data arranged by race/ethnicity, sex, age, disability status, and primary language?			
	b. Is data arranged by applicants, registrants, eligible applicants/registrants, participants, terminees, applicants for employment, and employees to facilitate assessment of nondiscrimination and EO at each decision point in the program(s)?			
	c. Is data stored in a manner that ensures confidentiality?			
	d. Is data used only for record keeping and reporting, determining applicant eligibility, and determining program compliance with nondiscrimination requirements?			
	e. Is data arranged in such a manner to allow cross-referencing of data to individual records?			
	2. Has the LWIA/PA CareerLink®/UCSC implemented a system to respond to discrimination complaints?			
	3. Does the LWIA/PA CareerLink®/UCSC retain records, including records of complaints, for a period of at least three years from the close of the applicable year or resolution of the complaint?			
	4. Does the LWIA/PA CareerLink®/UCSC maintain a log of complaints that allege discrimination on the ground(s) of race, color, religion, sex, national origin, age, disability, political affiliation or belief, citizenship, retaliation or reprisal against participants in a Title I-financially assisted program or activity?			
	a. Does the log include: (1) The name and address of the complainant; (2) The ground for the complaint; (3) A description of the complaint; (4) The date the complaint was filed; (5) The disposition of the complaint; and (6) Other pertinent information.			

SECTION B: DEFICIENCIES

SECTION C: CORRECTIVE ACTION

MONITOR SERVICE PROVIDERS FOR COMPLIANCE WITH EO REQUIREMENTS

SECTION A: RESPONSES

REFERENCE	ITEMS	RESPONSE		
		Yes	No	Partially
WIA SECTION 188 29 CFR PART 37 §37.25 §37.51 §37.52 §37.54	**THIS SECTION FOR LWIA ONLY**			
	1. Has the LWIA implemented a system for periodically monitoring service providers to determine whether they are conducting their WIA Title 1-funded programs and activities in a nondiscriminatory way?			
	2. How often is EO monitoring performed?			
	a. At least once a year?			
	b. At least once every 2-3 years?			
	c. No EO monitoring of service providers has been conducted.			
	3. If yes to 1 above, does the LWIA's annual monitoring review include:			
	a. Analysis of the data and records collected by race/ethnicity, sex, age, and disability status to determine whether differences in rates of application, placement, or termination have practical or statistical significance?			
	b. Where significant differences are found, does the LWIA conduct follow-up investigations to determine, through records review, interviews, and other appropriate investigative techniques, whether the differences are due to discrimination?			
	c. An assessment to determine whether the service provider has fulfilled its administrative obligations with regard to WIA Section 188 and 29 CFR Part 37 (e.g., record keeping, notice and communication, universal access, and complaint processing)?			
	4. Are written monitoring reports completed?			

SECTION B: DEFICIENCIES

SECTION C: CORRECTIVE ACTION

SECTION A: RESPONSES

REFERENCE	ITEMS	RESPONSE		
		Yes	No	Partially
WIA SECTION 188 29 CFR PART 37 §37.70 §37.71 §37.72 §37.73 §37.74 §37.75 §37.76 §37.77 §37.78 §37.79 §37.54	1. Has the LWIA/PA CareerLink®/UCSC adopted and published discrimination complaint procedures for resolving allegations of noncompliance with applicable nondiscrimination and EO provisions?			
	2. Has the LWIA/PA CareerLink®/UCSC adopted and published discrimination complaint procedures for resolving allegations against service providers of noncompliance with applicable nondiscrimination and EO provisions?			
	3. Do the published discrimination complaint procedures:			
	a. Provide for issuance of a written Notice of Final Action within 90 days of the date on which the complaint is filed which states: (1) Either a statement of the recipient's decision on the issue and an explanation of the reasons underlying the decision, or a description of the way the parties resolved the issue; and (2) The complainant has a right to file a complaint with CRC within 30 days of the date on which the Notice of Final Action is issued if he or she is dissatisfied with the recipient's final action on the complaint, or if there is no final resolution of the complaint within 90 days of the date that the complaint was filed?			
	b. Provide for an initial written notice to the complainant that acknowledges the receipt of the complaint and provides notice that the complainant has the right to be represented in the complaint process?			
	c. Provide for a written statement to the complainant concerning the recipient's accepting or rejecting each issue in the complaint for investigation, and the reasons for each rejection?			
	d. Provide for a fact finding or investigation period of the circumstances underlying the complaint?			
	e. Provide for a period during which the recipient attempts to resolve the complaint and the methods available to resolve the complaint must include alternative dispute resolution?			

SECTION A: RESPONSES

REFERENCE	ITEMS	RESPONSE		
		Yes	No	Partially
WIA SECTION 188	4. Has the LWIA/PA CareerLink®/UCSC established a system to record discrimination complaints?			
29 CFR PART 37 §37.70 §37.71 §37.72 §37.73 §37.74 §37.75 §37.76 §37.77 §37.78 §37.79 §37.54 §37.94	5. Do the LWIA's/PA CareerLink's®/UCSC's discrimination complaint processing procedures specify the following: a. who may file; b. where to file; c. timeframes; d. what the complaint should include; e. due process elements, and f. appropriate sanctions?			

SECTION B: DEFICIENCIES

SECTION C: CORRECTIVE ACTION

SECTION A: RESPONSES

REFERENCE	ITEMS	RESPONSE		
		Yes	No	Partially
WIA SECTION 188 **29 CFR PART 37 §37.54**	1. Has the LWIA/PA CareerLink®/UCSC established procedures for obtaining prompt corrective action when noncompliance is found?			
	2. Has the LWIA/PA CareerLink®/UCSC established a procedure for administering sanctions when noncompliance is found?			

SECTION B: DEFICIENCIES

SECTION C: CORRECTIVE ACTION

This page intentionally left blank

ADDENDUM

THE PENNSYLVANIA PHYSICAL AND PROGRAM ACCESS SELF-ASSESSMENT PROCESS

This document was developed collaboratively by representatives from State partner entities from the Office of Equal Opportunity, the Bureau of Workforce Development Partnership, the Office of Unemployment Compensation Benefits, the State Workforce Investment Board, The Office of Vocational Rehabilitation and Local Workforce Investment Boards.

The self-assessment process can be used by any facility, including businesses, that provides services to the public. The process includes checklists for evaluating physical/program access, and developing a Corrective Action Plan to correct deficiencies. It also provides resources that can assist facilities in their efforts to improve access for all Pennsylvanians.

THE PENNSYLVANIA PHYSICAL AND PROGRAM ACCESS SELF-ASSESSMENT PROCESS

INSTRUCTIONS

This Pennsylvania Physical and Program Access (PPA) Self-Assessment Process Addendum details the requirements of Element Five of the Nondiscrimination and Equal Opportunity (NEO) Self-Evaluation Guide (SEG). The Addendum contains the Self-Assessment Tool which includes a compliance checklist, and a Corrective Action Plan to correct deficiencies. Full submission instructions may be found in the NEO SEG, page 5.

The Office of Vocational Rehabilitation (OVR) provides technical assistance to LWIA, PA CareerLink®, and UCSC staff responsible for completing the Self-Assessment Process. Please contact your District OVR office for further information.

ADDENDUM: PPA SELF-ASSESSMENT TOOL

Section A of the PPA Self-Assessment Tool discusses universal access under the WIA, the roles that both facilities and programs play in achieving universal access, definitions of physical and program access, necessary areas of compliance, and the broader goals that compliance should help achieve. Section A contains valuable information that will assist in understanding the purpose and goals of universal access, compliance, and the self-assessment process and should be read in its entirety before conducting the self-assessment.

Section B provides more detailed instructions for completing the Self-Assessment. This section discusses who, and how many, should participate in the self-assessment process, how to prepare for it, how to involve the public in the process, and how the self-assessment relates to the Corrective Action Plan (CAP).

Section C presents the PPA checklists. These must be completed for the LWIA office, PA CareerLink® or UC Service Center.

Section D provides a template and instructions for completing the Corrective Action Plan (CAP).

Section E provides resources for assessment and transition planning.

SECTION A:
UNIVERSAL ACCESS

ACCESS UNDER THE WIA

The Workforce Investment Act (WIA) requires that both workforce investment and workforce investment-related services be provided to the public through local One-Stop service delivery systems. At a minimum, the three WIA programs (Youth, Adult, and Dislocated Workers), and some fifteen (15) other workforce programs (including Wagner-Peyser Act and Rehabilitation Act services), are required to be available through each of the local One-Stop systems. One-Stop systems must also provide universal access to the core employment-related services offered by all of these programs. "Information about job vacancies, career options, student financial aid, relevant employment trends, and instruction on how to conduct a job search, write a resume, or interview with an employer is available to any job seeker in the U.S., or anyone who wants to advance his or her career."[1] Unemployment Compensation programs authorized under Title III of the Social Security Act are included by definition under 29 CFR Part 37.4.

Universal access applies to all individuals seeking employment assistance, including persons with disabilities. The WIA makes it clear that recipients of WIA funds, including One-Stop Operators, Local Workforce Investment Areas (LWIAs), and UC Service Centers are obligated to provide physical and program access as required under both the Rehabilitation Act of 1973 and the Americans With Disabilities Act (ADA) of 1990.[2]

Title II of the ADA took effect in 1992. It prohibits all state and local governmental agencies from discriminating against persons with disabilities and from excluding participation in, or denying benefits of programs, services, or activities to persons with disabilities. Pennsylvania LWIAs, PA CareerLinks®, and UC Service Centers must meet the physical and program access standards in the law, including the Uniform Construction Code (UCC) and the ADA Title II Accessibility Guidelines (ADAAG). The ADAAG provides scope and technical requirements for accessibility to buildings and facilities under the ADA. It gives details and measurements for making facilities physically accessible.

If it is determined that LWIA offices, PA CareerLinks®, or UC Service Centers are not in compliance with these standards, the LWIA, PA CareerLink®, or UC Service Center must take action to remove physical and/or program barriers in order to comply. Achieving compliance with the UCC and ADAAG Title II is required by law. More importantly, such compliance is a key step in fulfilling the WIA concept of universal access by creating an atmosphere in PA CareerLinks® and UC Service Centers that is welcoming and inviting to all individuals in the community, including persons with disabilities.

---

[1] 20 CFR, Background, page 49294.
[2] 20 CFR, 667.275, page 49429

PHYSICAL AND PROGRAM ACCESS

Two terms that are commonly used when discussing the accessibility of services are "physical access" and "program access." Neither of these terms, however, has commonly accepted definitions. In order to assist State- and local-level policy makers in better understanding LWIA, PA CareerLink® and UC Service Center access issues for persons with disabilities, the Physical and Program Access (PPA) Self-Assessment Process uses the following definitions of these two terms:

- *Physical access is the act or opportunity of approaching or entering a physical space or area, including a site, building, or facility, or parts thereof.*
- *Program access is the act or opportunity of participating in and benefiting from programs and services.*

These terms are not mutually exclusive. For instance, special devices and auxiliary aids, as well as other forms of assistive technology, might reasonably fit under either definition. Physical access generally refers to both the physical space, and the physical equipment necessary for an individual to approach or enter the physical space, in which the program or service activity is available. Examples of building elements that can have physical access issues include areas from the point of arrival through the interior of the facility, and encompass parking, passenger drop-off and loading zones, exterior routes of travel, entrances and exits, walks and sidewalks, curb ramps, ramps, stairs, elevators, access lifts, doors and gates, access to and through rooms and spaces, restrooms, signs, alarms, and equipment such as computer desks or tables or the placement of chairs.

Program access generally refers to the ways in which information, programs, and services are presented and delivered, allowing individuals to interact with and fully benefit from them. Printed information, computer systems and programs, telephone devices for persons with hearing impairments, and the oral delivery of instructions or information are all program access items.

PHYSICAL AND PROGRAM ACCESS GOALS

Achieving compliance with the UCC and the ADAAG Title II is the first step towards barrier removal in the PA CareerLinks® and UC Service Centers. In Pennsylvania, however, the PA CareerLinks® and UC Service Centers should establish physical and program access goals at a level above minimum compliance as required by the UCC or ADAAG Title II, whichever provides greater access. Preferred goals are enhancements or improvements to building and service features that go beyond the minimum standards required by law. Setting such goals achieves important quality of life upgrades to facilities and services, resulting in universal benefit to all customers, and providing truly welcoming and easily accessible facilities and services for any customer seeking services.

SECTION B:
PHYSICAL AND PROGRAM ACCESS SELF-ASSESSMENT PROCESS AND INSTRUCTIONS

The purpose of the self-assessment process is to assist Local Workforce Investment Areas (LWIAs), PA CareerLinks®, and UC Service Centers in determining whether or not they are in compliance with physical and program access requirements and whether or not the environment for all members of the community who may wish to access services is comfortable and welcoming. The self-assessment process allows providers to monitor their own progress toward true universal access and to report that progress to the State. The process also provides guidelines for compliance, as well as training and technical assistance that may be necessary in order for providers to achieve their goals.

The Physical and Program Access Self-Assessment Tool has been designed to assist the LWIAs, PA CareerLinks®, and UC Service Centers in making these determinations by incorporating the access requirements of the Uniform Construction Code (UCC) and the Americans with Disabilities Act Accessibility Guidelines (commonly known as the ADAAG). Where the UCC requirements provides greater access, these have been incorporated. The Self-Assessment Tool is not a detailed or necessarily comprehensive survey, but is a general guideline to follow in determining and reporting the level of compliance and in identifying barriers. This tool not only aids in documenting compliance, but should help LWIAs, PA CareerLinks®, and UC Service Centers in becoming aware of what access problems may exist in their facilities and programs, to report those problems to the State, and to develop Corrective Action Plans in order to correct deficiencies and improve access.

LWIA Equal Opportunity (EO) Officers are responsible for completing the self-assessments at the LWIA level, and responsible for ensuring that each of the PA CareerLinks® and other Workforce Investment Act providers identify persons responsible for completing the self-assessments for their individual facilities. UCSC Site Administrators are responsible for completing self assessments for their individual facilities. The State will provide training to local EO Officers, EO Liaisons, Site Administrators, and staff responsible for doing the self-assessments. The training provides detailed instructions for completing each section of the Self-Assessment Tool and staff will have the opportunity to ask questions and raise issues concerning their particular facilities. The State will also make technical assistance available for LWIAs, PA CareerLinks®, and UC Service Centers during the time in which they complete self-assessments and develop Corrective Action Plans. Finally, this Guide contains a suggested list of resources in Section E that LWIAs, PA CareerLinks®, and UC Service Centers may use in seeking advice and additional help in completing both the Self-Assessment and the Corrective Action Plan (CAP).

PUBLIC INPUT FROM THE PERSONS WITH DISABILITIES

LWIAs, PA CareerLinks®, and UC Service Centers should involve persons with disabilities in both the self-assessment and the corrective action planning processes. Other interested persons or organizations should also be provided opportunities to participate in the self-assessment and corrective action planning processes. The experience of many communities confirms that cooperation between persons with disabilities and governmental entities can lead to creative problem solving, improved communications, and mutual understanding. In addition, involving persons with disabilities in decision-making will strengthen the accountability of the process and ensure wise use of limited public resources.

Some suggestions for identifying community members to assist with providing input are:

- Placing notices in local newspapers or on the radio asking local individuals or organizations to participate;
- Publishing information in handbooks, manuals, and pamphlets that are distributed to the public to describe programs and activities;
- Displaying informative posters in the PA CareerLinks® and other public places;
- Contacting Independent Living Centers in your area to request input and feedback;
- Contacting the Pennsylvania Office of Vocational Rehabilitation District Office for your area; and
- Contacting the regional Disability and Business Technical Assistance Center located at 401 North Washington Street, Rockville, MD 20850 (Toll Free [800] 949-4232 V/TTY or [301] 251-3764 fax).

Note that any solicitation for public input from persons with disabilities should comply with the Title II requirements for effective communication, which include providing the information in alternate formats.

THE PHYSICAL AND PROGRAM ACCESS CHECKLISTS

Section C is a pullout section that contains the checklist for both physical and program access. This section should be "pulled out" and duplicated so that it can be used throughout the facility as the self-assessment is conducted. The left-hand column contains access elements that include legal citations and questions that must be answered in various, general review areas. The right-hand column contains possible solutions for any questions with negative responses. It should be noted again that conducting this self-assessment is only a first step in a facility's efforts to comply with the law and to provide a protected, welcoming, universally accessible, and easy-to-navigate environment. When the self-assessment and the checklists are completed, any deficiencies can easily be transferred into the Corrective Action Plan.

In preparing to conduct the self-assessment, staff should start by reviewing the building floor plans. For Commonwealth owned or leased facilities, copies of floor plans should

be available from the Labor and Industry Burea of Administrative Services, Property Management Division. During the self-assessment itself, if plans are not available, graph paper can be used to sketch the layout of all interior and exterior spaces in the facility. Notes should be made on the sketch or plan while the self-assessment is being conducted. It will be necessary to bring multiple copies of the checklists, along with a flexible steel tape measure, a tool to measure percentage of slope (such as *SmartTool*), and a door pressure gauge. As many as three or more people may have to work as a team to conduct the self-assessment, with one person responsible for numbering key items on the floor plan to match with the field notes, another to write the field notes, and another to take the necessary measurements. However many people conduct the self-assessment, they must possess the necessary expertise and knowledge regarding both physical and program access. Two or three additional people, with various disabilities, should be invited to assist in the self-assessment process to help identify barriers, develop solutions for removing these barriers, and set priorities for implementing improvements.

If the survey is performed and severe or complex physical accessibility problems are found, then the facility may want to consult with a facilities expert, architect, or expert in assistive technology. At that point, the expert would have to conduct a more in-depth assessment in order to deal with multiple or difficult issues, but this would not necessarily affect the completion of the two checklists.

When the checklist is completed, it must be signed by the EO Officer or other person responsible for completing the self-assessment. Electronic transmittal by the EO Officer serves as signature.

ADDITIONAL COMMENTS ON PROGRAM ACCESS

When customers enter a PA CareerLink® facility or contact a UC Service Center, they reasonably expect that all programs and services will be available to and accessible by them, regardless of who they are or what barriers to participation exist for them. For instance, customers who are blind anticipate that written materials provided to all customers will be made available in alternate formats such as Braille, electronic text, or audiocassette.

Full access to programs and services is a dynamic process that requires ongoing, pro-active assessment, change, and modification as needed. The guidelines listed below are not meant to be comprehensive. Instead, they are intended to serve as a starting point when addressing issues related to program accessibility in the subject facility. Staff who are responsible for ensuring compliance in the LWIA, PA CareerLinks®, and UC Service Centers should continually evaluate and revise these guidelines and should consult with customers, community partners, and the general public for input.

- When and where possible, subject facilities should pursue alternatives to structural changes in order to achieve program accessibility. Nonstructural alternatives

include acquisition or redesign of equipment, assignment of facility staff to customers, and provision of services at alternate, accessible sites.

- When choosing methods of providing program access, facilities should give priority to the ones that result in the most integrated setting appropriate to encourage interaction among all users, including individuals with disabilities.
- Facilities, particularly PA CareerLinks®, should develop a desktop community resource manual for staff to use when attempting to determine how best to meet the needs of customers with disabilities. The manual should include information on local Braille Translation services, sign language interpreters, Computer Assisted Real-Time Transcription (CART), Assistive Listening Devices (ALDs), and speech communication service providers (voicers) for customers whose disabilities affect their ability to communicate orally with others. Additional resources should be considered to address the needs of all disability categories.
- Emergency evacuation plans should be provided to customers in their preferred language and preferred communication medium: e.g., Braille, audio cassette, videotape with closed captioning, ASL video, etc.
- LWIA, PA CareerLink®, and UC Service Center staff should receive training at regular intervals on disability awareness and sensitivity to promote a welcoming environment and to ensure compliance with the recent changes in the law.

PUBLIC TRANSPORTATION DROP-OFF POINTS

If a public transportation drop-off point is in the vicinity of the facility and has the potential to bring customers who are disabled to the building to receive services, accessibility from these points should be reviewed. The person designated responsible for the self-assessment should conduct this review. Attention should be given to areas within one-fourth of a mile radius between the public transportation drop-off points and the facility being assessed. These areas include but are not limited to public sidewalks, streets, crosswalks, and curbs. Persons with disabilities should assist in this review to help identify barriers.

If problems are found that are outside the facility's realm of responsibility, such as public sidewalks or streets, the LWIA or PA CareerLink® should submit a letter to the local city or county entity responsible for the public walkways. The letter should contain an explanation of the services provided by the facility to persons with disabilities and should include both a listing (including location) and photographs of the barriers. In addition, the letter should include a request to the local governmental entity to repair or remove the barriers. The LWIA or PA CareerLink® Operator should retain a copy of the letter along with the Corrective Action Plan (CAP) in order to show that a good faith effort was made to resolve barriers affecting the path of travel to the facility in question.

If the local governmental entity responsible for the public walkways is unable or refuses to correct the barriers, other alternatives can be considered such as:

- Offering an equivalent facilitation, which may include bringing the services provided by the facility to the client (other options may be meeting the client at the public transportation drop-off point and assisting with access into the building, or advising the client to use a more accessible facility in the area);
- Working with the local jurisdiction in an attempt to improve the situation (e.g., asking that buses be rerouted so stops are closer to the building or are on a more accessible path of travel to the building);
- Developing an exemption process or claiming an unreasonable hardship for inaccessible public walkways (an equivalent facilitation should still be available to the persons with disabilities using the facility and every attempt should be made to work towards accessibility); and
- Relocating the facility to a more accessible site.

SECTION B:
COMBINED PHYSICAL/PROGRAM ACCESS CHECKLIST

This checklist combines both physical and program access elements that the Local Workforce Investment Area (LWIA) offices, PA CareerLinks®, and UC Service Centers must assess. This may only be the first step in the effort to make the facilities and programs universally accessible by all potential customers. Where deficiencies are found, further review and exploration, with architects and other experts, may be required in order to fully understand and respond to specific, detailed requirements. Also, other, more detailed checklists may be used to supplement the Physical and Program Access checklist. The resource list in Section E provides information about other, more detailed checklists that are available.

The checklist is divided into nine broad access elements that cover the basics of both physical and program access requirements. Each element is broken down into one or more sub-elements, or specific factors that must be addressed.

The first column lists all of these elements and sub-elements, as well as where the element and sub-element requirements can be found in law. The sub-elements are listed as questions, which require simple "yes" or "no" answers. To the right of the sub-element, in the second column, the checklist provides possible solutions if the answer in column one is a "no." In completing the checklist, all questions should be answered and the "possible solutions" checked off as appropriate.

The full checklist is available electronically as a Microsoft Word table. Although this checklist must be completed and submitted, LWIAs, PA CareerLinks®, and UC Service Centers may use other, more detailed checklists as working documents during their self-assessments (see resource list in Section E).

Combined Physical/Program Access Checklist

Facility Name: _____

ACCESS ELEMENT A: INTEGRATED PROGRAMS	POSSIBLE SOLUTIONS
The integration of individuals with disabilities into the mainstream of society is fundamental to the purposes of the Americans with Disabilities Act and the provision of services.	
Integrated Benefits and Services	
1. Do all of your policies and practices provide services and benefits to individuals with disabilities in an integrated manner? *Example: You may also offer separate programs where necessary to assure that the program is equally effective for individuals with disabilities.* ☐ Yes ☐ No	☐ The policy and practice will be developed and implemented by: _____ (date)
2. Has all of your staff received disability awareness training and are they aware of a process to offer accommodations in order to provide accessibility to programs and services? ☐ Yes ☐ No Date of last training: _____ Frequency of training: _____ (e.g., annually, twice annually, etc.)	☐ Disability awareness training will be provided by: _____ (date)
Right to Choose	
3. Do your policies and practices allow an individual with a disability to choose to participate in the regular program, even if a separate program is permitted? *Example: It would not be a violation for a One-Stop Center partner to offer training programs designed for participants with cognitive disabilities, but it would a violation if the One-Stop Center partner refused to allow participants with cognitive disabilities to participate in its regular training programs.* ☐ Yes ☐ No	☐ The policy and practice will be developed and implemented by: _____ (date)

ACCESS ELEMENT A (cont.)	POSSIBLE SOLUTIONS
4. Are all staff aware that it may be necessary to provide a reasonable accommodation to enable individuals with disabilities to participate in and benefit from the program? ☐ Yes ☐ No	☐ The policy and practice will be developed and implemented by: _____ (date)
Requesting Accommodations	
5. Do you have a process to offer reasonable accommodations in order to provide accessibility to programs and services? ☐ Yes ☐ No	☐ The policy and process will be developed and implemented by: _____ (date)
Right to Refuse	
6. Do your policies and practices allow an individual with a disability to choose not to accept a reasonable accommodation or benefit? ☐ Yes ☐ No	☐ The policy and practice will be developed and implemented by: _____ (date)
Surcharges and Additional Requirements *PA CareerLinks® may not impose extra charges upon individuals with disabilities to cover the costs of effective communication, reasonable accommodations or access features, and may not impose any additional requirements or burdens on individuals with disabilities that they do not require of all other participants in the program.*	
7. Are there any circumstances in which an individual with a disability would be asked to pay a fee or meet any other requirements not imposed on other program participants? ☐ Yes ☐ No	☐ The policy to remove such practice will be developed and implemented by: _____ (date)

ACCESS ELEMENT B: ACCESSIBLE APPROACH AND ENTRANCE	POSSIBLE SOLUTIONS
People with disabilities should be able to arrive on site, approach a building, and enter as freely as everyone else. At least one route of travel should be safe and accessible to everyone.	
Parking and drop-off Areas (ADA Chapters 208.2, 208.2.4, 208.3.1, 502, 503)	
1. Are an adequate number of accessible parking spaces available, 8 feet wide for car plus 5 feet wide access aisle? ☐ Yes ☐ No Number of car accessible spaces: _____	☐ Reconfigure a reasonable number of spaces by repainting stripes. *he following number of total accessible parking spaces are required for the number of vehicles indicated:* *1-25 — 1 van space* *26-50 — 2 including 1 van space* *51-75 — 3 including 1 van space* *76-100 — 4 including 1 van space* *For lots over 100 spaces, refer to Section E, Resource List for further information.*
2. Are 8-foot wide spaces with minimum 8-foot wide access aisles and 8-feet 2-inches (98 inches) of vertical clearance available for lift-equipped vans? (Figure 1) ☐ Yes ☐ No Number of van accessible spaces: _____ Width of access aisle: _____ Vertical clearance: _____	☐ Reconfigure to provide van-accessible space(s). At least one of every 8 accessible spaces must be van accessible (with a minimum of one van accessible space in all cases.)
3. Do access aisles offer a pathway behind vehicles as part of the access route to the accessible entrance (e.g., would an individual going behind the vehicle still have access to the access ramp)? ☐ Yes ☐ No	☐ Add curb ramps. ☐ Reconstruct sidewalk.

ACCESS ELEMENT B (cont.)	POSSIBLE SOLUTIONS
4. Are accessible parking spaces and access aisles level with surface slopes not exceeding 1:48 (2%) in all directions? *(Slope is a ratio of height to length. 1:48 means for every 48 inches of length, the height increases 1 inch. For a 1:48 maximum slope, at least 48 inches of length is needed for each inch of height. Divide the total increase in height by the total length.)* ☐ Yes ☐ No	☐ Reconfigure spaces. ☐ Reconstruct parking area.
5. Are accessible spaces closest to accessible entrance? ☐ Yes ☐ No	☐ Reconfigure spaces.
6. Are accessible spaces marked with an identification sign? Are van spaces marked as "Van Accessible"? Are passenger loading and unloading zones identified with the International Symbol of Accessibility? ☐ Yes ☐ No	☐ Install signs in parking lots. ☐ Add or update signs and place so cars do not obstruct them.
7. Is there a policy to ensure only those who need them use accessible spaces? ☐ Yes ☐ No	☐ Implement policy and check periodically for violations and report them to the proper authorities.
Route of Travel (ADA Chapters 204, 206, 307, 402, 403)	
8. Is there a route of travel that does not require the use of stairs? ☐ Yes ☐ No	☐ Add a ramp. ☐ Add an alternative route on level ground.
9. Is the route stable, firm and slip-resistant? ☐ Yes ☐ No	☐ Repair uneven paving. ☐ Fill small bump/breaks with beveled patches. ☐ Replace gravel with hardtop.
10. Is the route at least 36 inches wide? Width: _____ ☐ Yes ☐ No	

ACCESS ELEMENT B (cont.)	POSSIBLE SOLUTIONS
11. Can all objects protruding more than 4 inches into circulation paths be detected by someone with a visual disability using a cane? (Figure 2(a), 2(b) Distance from wall: _____ Height: _____ *To be detected with a cane, an object must be within 27 inches of the ground. Objects hanging or mounted overhead must be higher than 80 inches to give clear headroom.* ☐ Yes ☐ No	☐ Change/move landscaping, furnishings or other features. ☐ Widen route. ☐ Move/remove protruding objects ☐ Add a cane-detectable base that extends to the ground. ☐ Place a cane-detectable object on the ground underneath as a warning barrier.
12. Do curbs on the route have cut outs at drives, parking, and drop-offs? ☐ Yes ☐ No	☐ Install curb cuts.
13. Is the **cross** slope 1:50 (2.0%) or less? Divide the height of the slope by the width of the ramp. *(Slope is a ratio of height to length. 1:50 means for every 50 inches across the cut out, the height increases 1 inch. For a 1:50 maximum slope, at least 50 inches of curb cut out width is needed for each inch of height. Divide the total increase in height by the length. When looking straight on at a ramp, cross slope is measured across the ramp (left to right or right to left.)* ☐ Yes ☐ No	☐ Add small ramp up to the curb
Ramps (ADA Chapters 403.6, 405, 505) "Ramp" is defined as a slope of greater than 5% (1:20).	
14. Are slopes or ramps no greater than 1:12 or 8.33%? Divide the height by the length. (Slope is a ratio of height to length. 1:12 means for every 12 inches along the base of a ramp, the height increases 1 inch. For a 1:12 maximum slope, at least one foot of ramp length is needed for each inch of height.) (Figure 3) ☐ Yes ☐ No ☐ N/A	☐ Lengthen ramp to decrease slope. ☐ Relocate ramp. ☐ If space is limited, reconfigure ramp to include switchbacks.
15. Do all ramps longer than 6 feet have railings on both sides, where rise is more than 6" or the horizontal projection is greater than 72"? ☐ Yes ☐ No ☐ N/A	☐ Add railings.

ACCESS ELEMENT B (cont.)	POSSIBLE SOLUTIONS
16. Is the width between railings and curbs at least 36 inches? Width: _____ ☐ Yes ☐ No ☐ N/A	☐ Relocate the railings. ☐ Install a ramp with a width of at least 36" between the inside of the handrails.
17. Are ramps non-slip? ☐ Yes ☐ No ☐ N/A	☐ Add non-slip surface material.
18. Is there a 5-foot-long level landing at each 30-foot horizontal length of ramp, at the top and bottom of ramps and at switchbacks? Length: _____ ☐ Yes ☐ No ☐ N/A	☐ Remodel or relocate the ramp.
19. Is the ramp rise no more than 30 inches between landings? Rise: ☐ Yes ☐ No ☐ N/A	☐ Remodel or relocate ramp
20. Are **cross** slopes no higher than 1:50 or 2.0%? ☐ Yes ☐ No ☐ N/A	☐ Remodel or relocate ramp.
Entrance (ADA Chapters 206.4, 402, 404)	
21. If there are stairs at the main entrance, is there a ramp or lift, or other accessible entrance? ☐ Yes ☐ No ☐ N/A	☐ If the main entrance cannot be made accessible, create a dignified alternate accessible entrance.
22. Do all inaccessible entrances have signs giving the location of the nearest accessible entrance? ☐ Yes ☐ No	☐ Install signs so people do not have to retrace the approach.
23. Can the alternate entrance be used independently? ☐ Yes ☐ No	☐ As much as possible, eliminate the need for aid to answer a doorbell, operate a lift.
24. Does the entrance door have at least 32 inches clear opening (at least one 32-inch leaf on a double door)? (Figure 4) ☐ Yes ☐ No	☐ Widen the door to 32 inches clear. ☐ Install offset (swing-clear) hinges.

ACCESS ELEMENT B (cont.)	POSSIBLE SOLUTIONS
25. Is there a threshold edge 1/4 inch high or less, or beveled edge from 1/4 to 1/2 inch high? (Figure 6) Height: _____ ☐ Yes ☐ No	☐ If there is a single step with a rise of 6 inches or less, add a short ramp. ☐ If the threshold is greater than 1/2 inch high, remove it or modify to be a ramp.
26. Are carpeting or mats a maximum of 1/2 inch high? Height: _____ ☐ Yes ☐ No	☐ Replace or remove mats.
27. Are edges securely installed to minimize tripping hazards? ☐ Yes ☐ No	☐ Secure carpeting or mats at edges.
28. Is the door handle no higher than 48 inches high and operable with a closed fist? Height: _____ ☐ Yes ☐ No *The closed-fist test for handles and controls: Try opening the door or operating the control using only one hand held in a fist. If you can do it, so can a person with limited use of hands.*	☐ Lower handle. ☐ Replace inaccessible knobs with a lever or loop handle. ☐ Retrofit with an add-on lever extension.
29. Is the door pressure 15 pounds or less? Force: _____ (External door only) ☐ Yes ☐ No This can be tested with a simple fish scale available at retailers who sell fishing supplies.	☐ Adjust door closures and oil the hinges. ☐ Install power-assisted or automatic door openers.
30. If the door has a closer, does it take at least 3 seconds to close? Time in seconds: _____ ☐ Yes ☐ No ☐ N/A	☐ Install lighter doors. ☐ Adjust door closer.
31. If the entrance door has an opening pressure of more than 5 pounds does it have an automatic power door opener? ☐ Yes ☐ No ☐ N/A	☐ Install automatic door openers.

ACCESS ELEMENT B (cont.)	POSSIBLE SOLUTIONS
32. If there are two doors in a series is the minimum space between the doors at least 48 inches plus the width of any door swinging into the space? (Figure 7) ☐ Yes ☐ No ☐ N/A	☐ Reverse the swing of one set of doors.

ACCESS ELEMENT C: ACCESS TO PROGRAMS AND SERVICES	POSSIBLE SOLUTIONS
Ideally, the layout of the building should allow people with disabilities to obtain materials and services without assistance.	
Horizontal Circulation (ADA Chapters 206.3, 402, 404)	
33. Does the accessible entrance provide direct access to the main floor, lobby or elevator? ☐ Yes ☐ No	☐ Add ramps or lifts. ☐ Make another entrance accessible.
34. Are all public spaces on an accessible route of travel? ☐ Yes ☐ No	☐ Provide access to all public spaces along an accessible route of travel.
35. Is the accessible route to public spaces at least 36 inches wide? Width: _____ ☐ Yes ☐ No	☐ Move furnishings such as tables, chairs, display racks, vending machines and counters to make more room.
36. Is there a 5-foot circle or T-shape for turning a wheelchair completely? (Figure 8) ☐ Yes ☐ No	☐ Rearrange furnishings, displays and equipment.
Doors (ADA Chapters 206.5, 404)	
37. Do all doors have at least a 32-inch clear opening? (Figure 4) ☐ Yes ☐ No	☐ Identify/widen/replace doors. ☐ Install offset (swing clear) hinges
38. On the pull side of doors, next to the handle, is there at least 18 inches of clear wall space so a person using a wheelchair can get near to open the door? (Figure 5(a), 5(b)) Space: _____ ☐ Yes ☐ No	☐ Reverse the door swing if safe to do so. ☐ Move/remove obstructing partitions. ☐ Rearrange furnishings, displays and equipment.

ACCESS ELEMENT C (cont.)	POSSIBLE SOLUTIONS
39. Can doors be opened without too much force (5lb. force maximum for interior doors)? Force: _____ ☐ Yes ☐ No	☐ Install power-assisted or automatic door openers. ☐ Adjust or replace closers. ☐ Install lighter doors.
40. Are door handles between 48 inches high or less and operable with a closed fist? Height: _____ ☐ Yes ☐ No	☐ Lower handles. ☐ Replace inaccessible knobs or latches with lever or loop handles. ☐ Retrofit with add-on levers ☐ Install power-assisted or automatic door openers.
41. Are all threshold edges 1/4 inch high or less, or beveled from 1/4 to 3/4 inch high with a slope not exceeding 1:2? Height: _____ ☐ Yes ☐ No	☐ If there is a threshold greater than 3/4 inch high, remove it or modify to be a ramp. ☐ If between 1/4 and 3/4 inch high, add bevels to both sides.
Rooms & Spaces (ADA Chapters 203.9, 206.2.8, 206.5.2, 404)	
42. Are all aisles and pathways to materials and services at least 36 inches wide? Width: _____ ☐ Yes ☐ No	☐ Rearrange furniture and fixtures to clear aisles.
43. Is there a 5 foot circle or T-shaped space for turning a wheelchair completely? (Figure 8) ☐ Yes ☐ No	☐ Rearrange furniture and fixtures to clear aisles.
44. Is carpeting low-pile (1/2 inch or less), tightly woven and securely attached along edges? ☐ Yes ☐ No	☐ Secure edges on all sides. ☐ Replace carpeting.
45. In circulation paths through public areas, are all obstacles cane-detectable (within 27 inches of the floor or higher than 80 inches, or protruding less than 4 inches, from the wall)? (Figure 2(a), 2(b)) Width: _____ Protrusion: _____ ☐ Yes ☐ No	☐ Remove obstacles. ☐ Install furnishing, planters or other cane - detectable barriers underneath.

ACCESS ELEMENT C (cont.)	POSSIBLE SOLUTIONS
Emergency Egress (ADA Chapters 207, 216.4, 703.1, 703.2, 703.5)	
46. Are emergency systems (fire alarms, smoke detectors, etc.) provided? ☐ Yes ☐ No	☐ Consider installing visible and audible alarms.
47. If emergency systems are installed, do they have both flashing lights and audible signals? ☐ Yes ☐ No	☐ Install flashing lights and audible signals. ☐ Install portable devices. ☐ Develop an emergency evacuation plan including areas of rescue, use an air horn, train all staff, post visibly, have available for customers.
48. Are exit doors clearly marked? ☐ Yes ☐ No	☐ Install exit door markings.
Signage for Programs & Services (ADA Chapters 216, 703) *Different requirements apply to different kinds of signs.*	
49. Do signs and room numbers designating permanent rooms and spaces where programs/services are provided comply with appropriate sign requirements? ☐ Yes ☐ No	☐ Provide signs that have raised letters, Grade II Braille, and meet other requirements for permanent room/space signage.
50. Are tactile signs mounted with centerline 60 inches from the floor? Height: _____ ☐ Yes ☐ No	☐ Mount tactile signs.
51. Are tactile signs mounted on wall adjacent to latch side of door, or as close as possible? ☐ Yes ☐ No	☐ Mount tactile signs on adjacent wall.
52. Are raised characters between 5/8 and 2 inches high with high contrast (for room numbers, toilet rooms and exits)? Character Height: _____ ☐ Yes ☐ No	☐ Install raised characters.
53. Does Braille text contain the same information?	☐ Install the same information in Braille

☐ Yes ☐ No	text.
ACCESS ELEMENT C (cont.)	**POSSIBLE SOLUTIONS**
Directional and Informational Signage	
54. If mounted above 80 inches, are letters at least 3 inches with high contrast and non-glare finish? Height: _____ ☐ Yes ☐ No ☐ N/A	☐ Provide signs that meet the requirements for character size, contrast, and finish.
55. Do directional and informational signs comply with legibility requirements? ☐ Yes ☐ No *Directories and temporary signs need not comply.*	☐ Review requirements and replace signs as needed.
Controls (ADA Chapters 205, 309)	
56. Are controls available for use by the public or employees (electrical, mechanical, cabinet, self-service controls) and located at an accessible height? (Figure 9(a), 9(b)) Height: _____ ☐ Yes ☐ No *Reach ranges: For a forward reach, 48 inches for a maximum height and 15 inches for a minimum height. For a side reach 54 inches for a maximum height and 9 inches for a minimum height.*	☐ Relocate controls.
57. Are they operable with a closed fist? ☐ Yes ☐ No	☐ Replace controls.
Seats, tables & counters (ADA Chapters 226, 902)	
58. Are aisles between fixed seating (other than assembly areas) at least 36 inches wide? Width: _____ ☐ Yes ☐ No	☐ Rearrange chairs or tables to provide 36-inch aisles.
59. Are spaces for wheelchair seating dispersed throughout? ☐ Yes ☐ No	☐ Remove some fixed seating. ☐ Rearrange seating.

ACCESS ELEMENT C (cont.)	POSSIBLE SOLUTIONS
60. Are tabletops and counters 28-34 inches high? ☐ Yes ☐ No	☐ Lower part or all of high surface. ☐ Provide auxiliary table or counter. ☐ Replace or raise tables.
61. Is knee space at accessible tables at least 27 inches high, 30 inches wide and 19 inches deep? Height: _____ Width: _____ Depth: _____ ☐ Yes ☐ No	☐ Replace table
62. At each type of transaction counter, is a part of the main counter at least 36 inches in length and no less than 28 inches and more than 34 inches high or has space for passing items to persons who have difficulty reaching over a high counter?? Height: _____ ☐ Yes ☐ No	☐ Provide lower auxiliary counter or folding shelf. ☐ Arrange counter and furnishings to create a space to exchange items.
Vertical circulation (ADA Chapters 210, 407, 504)	
63. Are there ramps, wheelchair lifts or elevators to all public areas? ☐ Yes ☐ No ☐ N/A	☐ Install ramps or lifts. ☐ Modify a service elevator. ☐ Relocate goods/services to an accessible area.
64. If there are stairs between the entrance and/or elevator and essential public areas, is there an accessible alternate route on each level? ☐ Yes ☐ No ☐ N/A	☐ Post clear signs directing people along an accessible route.
Stairs (ADA Chapters 210, 302, 504) **These questions apply to stairs connecting levels not served by an elevator, ramp or lift.**	
65. Do treads have a non-slip surface? ☐ Yes ☐ No ☐ N/A	☐ Add non-slip surface to treads.
66. Do stairs have continuous rails on both sides with extensions beyond the top and bottom stairs? ☐ Yes ☐ No ☐ N/A	☐ Add or replace handrails if possible within existing floor plan.

ACCESS ELEMENT C (cont.)	POSSIBLE SOLUTIONS
Elevators (ADA Chapters 407)	
67. Does the facility have an elevator: ☐ Yes ☐ No **If "No" skip to question 75.**	
68. Are there visual and verbal or audible door opening/closing and floor indicators? ☐ Yes ☐ No	☐ Install visual and verbal or audible signals.
69. Are call buttons in hallway no higher than 42 inches? Height: _____ ☐ Yes ☐ No	☐ Lower call buttons. ☐ Provide permanently attached reach stick.
70. Do controls in the elevator cab have raised and Braille lettering? ☐ Yes ☐ No	☐ Install raised lettering and Braille next to buttons.
71. Is inside dimension of elevator at least 51" x 68" for side opening door, 51" x 80" for center opening door? ☐ Yes ☐ No What is the inside width: _____ depth: _____ of the elevator/lift? What is the width of the door? _____	
72. Is there a sign on both doorjambs at every floor indicating the floor in raised and Braille letters? ☐ Yes ☐ No	☐ Install tactile signs to identify floor numbers, 60 inches from the floor.
73. If an emergency intercom is provided, is it usable without voice communication? ☐ Yes ☐ No	☐ Modify communication system.
74. Is the emergency intercom identified by Braille and raised letters? ☐ Yes ☐ No	☐ Install tactile identification.
Lifts (ADA Chapters 302, 303, 305, 308, 410)	
75. Does this facility have a lift? ☐ Yes ☐ No **If "No" skip to question 79.**	

ACCESS ELEMENT C (cont.)	POSSIBLE SOLUTIONS
76. Can the lift be used without assistance? ☐ Yes ☐ No	☐ At each stopping level, post clear instructions for using the lift.
77. Is there at least 30 by 48 inches of clear space for someone in a wheelchair to reach the controls and use the lift? ☐ Yes ☐ No	☐ Rearrange furnishings and equipment to clear more space.
78. Are controls between 15 and 48 inches high? Height: _____ ☐ Yes ☐ No	☐ Move controls.

ACCESS ELEMENT D: USABILITY OF TOILET ROOMS	POSSIBLE SOLUTIONS
Doorways & passages (ADA Chapters 216.3, 216.8, 308, 404, 603, 604, 703.1, 703.2, 703.5)	
79. Is there tactile signage identifying rest rooms? *Mount signs on wall on the latch side of the door under permanent signage requirements.* ☐ Yes ☐ No	☐ Add accessible signage placed to the side of the door, 60 inches to centerline - not on the door itself.
80. Are pictograms or symbols used to identify toilet rooms? ☐ Yes ☐ No	☐ Add directional signs with raised characters and Braille below pictogram symbol.
81. Is the doorway at least 32 inches clear? (Figure 10) Clear width: _____ ☐ Yes ☐ No	☐ Install offset (swing-clear hinges). ☐ Widen the doorway.
82. Are doors equipped with accessible handles (operable with a closed fist), 48 inches high or less? Height: _____ ☐ Yes ☐ No	☐ Lower handles. ☐ Replace knobs/latches with lever or loop handles. ☐ Add lever extensions. ☐ Install power-assisted or automatic door openers.

ACCESS ELEMENT D (cont.)	POSSIBLE SOLUTIONS
83. Is door opening force 5 pounds or less? Force: _____ ☐ Yes ☐ No	☐ Adjust or replace doors. ☐ Install lighter doors. ☐ Install power-assisted or automatic door openers.
84. Does the entry setup provide adequate maneuvering space for a person using a wheelchair? (Figure 10) Space: _____ ☐ Yes ☐ No A person in a wheelchair needs 36 inches of clear width for forward movement, and a 5-foot diameter or T-shape clear space to make turns. A minimum 48 inches clear of the door swing is needed between the two doors of an entry vestibule.	☐ Rearrange chairs, trashcans, etc. ☐ Remove inner door if there is a vestibule with two doors. ☐ Move or remove obstructing partitions.
85. Is there a 36-inch wide path to all fixtures? (Figure 10) Width: _____ ☐ Yes ☐ No	☐ Remove obstructions.
Stalls (ADA Chapters 213.3.2, 604)	
86. Is the stall door operable with a closed fist inside and out? ☐ Yes ☐ No	☐ Replace inaccessible knobs with lever or loop handles. ☐ Add lever extensions.
87. Is there a wheelchair accessible stall with a clear area at least 5 feet by 5 feet, clear of door swing with floor mounted w.c. (56 inches deep for wall mount) or a T-shaped clear space for turning around? (Figure 11) Length: _____ Width: _____ ☐ Yes ☐ No Or is there a stall that is less accessible but that provides greater access than a typical stall (48 x 69 inches) ☐ Yes ☐ No	☐ Move or remove partitions. ☐ Reverse the door swing if it is safe to do so.

ACCESS ELEMENT D (cont.)	POSSIBLE SOLUTIONS
88. In the accessible stall, are there grab bars on the walls behind and to the side of nearest the toilet? (Figure 12) ☐ Yes ☐ No	☐ Add grab bars.
89. Is the toilet seat 17 to 19 inches high? (figure 12) Height _____ ☐ Yes ☐ No	☐ Add raised seat.
Access to toilet rooms (ADA Chapters 213)	
90. Is at least one toilet room available to the public (one for each sex or unisex) fully accessible? ☐ Yes ☐ No	☐ Provide a fully accessible public toilet room.
91. Are there signs at inaccessible rest rooms that give directions to accessible ones? ☐ Yes ☐ No	☐ Install directional signs.
Lavatories (ADA Chapters 213.2, 213.3, 606)	
92. Does one lavatory have a 30-inch wide by 48-inch deep clear space in front? (Figure 13) Space: _____ ☐ Yes ☐ No *A maximum of 19 inches may be under the lavatory.*	☐ Rearrange furnishings. ☐ Replace lavatory. ☐ Remove/alter cabinetry to provide space. ☐ Make sure hot pipes are covered. ☐ Move partition or wall.
93. Is the top of the lavatory rim no higher than 34 inches? (Figure 14) Height: _____ ☐ Yes ☐ No	☐ Adjust or replace lavatory.
94. Is there at least 29 inches from the floor to the bottom of the lavatory apron excluding pipes? (Figure 14) Height: _____ ☐ Yes ☐ No	☐ Adjust or replace lavatory.

ACCESS ELEMENT D (cont.)	POSSIBLE SOLUTIONS
95. Can the faucet be operated with one closed fist? ☐ Yes ☐ No	☐ Replace with paddle handles.
96. Are soap and other dispensers and hand dryers within reach ranges and usable with one closed fist? ☐ Yes ☐ No *Reach ranges: For a forward reach, 48 inches for a maximum height and 15 inches for a minimum height. For a side reach 54 inches for a maximum height and 9 inches for a minimum height*	☐ Lower dispensers. ☐ Replace with or provide additional accessible dispensers.
97. Is the mirror mounted with the bottom edge of the reflecting surface 40 inches high or lower? (Figure 14) ☐ Yes ☐ No	☐ Add a larger mirror elsewhere in the room. ☐ Lower or tilt down the mirror.

ACCESS ELEMENT E: ADDITIONAL ACCESS	POSSIBLE SOLUTIONS
When amenities such as drinking fountains and public telephones are provided, they should be accessible to people with disabilities	
Drinking fountains (ADA Chapters 211, 309, 602)	
98. Is there at least one fountain with clear floor space at least 30 by 48 inches in front? (Figure 15) Space: _____ ☐ Yes ☐ No	☐ Clear more room by rearranging or removing furnishings.
99. Is there one fountain with a spout no higher than 36 inches from the ground? (Figure 15) Height: _____ ☐ Yes ☐ No	☐ Provide cup dispensers for fountains with spouts that are too high. ☐ Provide accessible cooler.
100. Are controls mounted on the front or on the side near the front edge and operable with one closed fist? ☐ Yes ☐ No	☐ Replace the controls.

ACCESS ELEMENT E (cont.)	POSSIBLE SOLUTIONS
101. Is each water fountain cane-detectable (located within 27 inches of the floor or protruding less than 4 inches from the wall)? Height: _____ ☐ Yes ☐ No	☐ Place a planter or other cane-detectable barrier on each side at floor level.
Telephone (ADA Chapters 217, 704)	
102. Are pay or public use phones provided? ☐ Yes ☐ No **If "No" skip to end for authentication.**	
103. Is there clear floor space of 30 by 48 inches in front of at least one? (Figure 16) ☐ Yes ☐ No	☐ Move furnishings ☐ Replace booth with open station.
104. Is the highest operable area of the phone no higher than 48 inches (up to 54 inches if a side approach is possible)? Figure 16) Height: _____ ☐ Yes ☐ No	☐ Lower telephone.
105. Does the phone protrude no more than 4 inches into the circulation space and if so, is the bottom of the side more than 27 inches from the floor? (Figure 16) Protrusion: _____ Side Height: _____ ☐ Yes ☐ No	☐ Place a cane-detectable barrier on each side at floor level.
106. Does the public phone have large push-button controls? ☐ Yes ☐ No	☐ Contact phone company to install large push-button controls.
107. Is the phone hearing-aid compatible? ☐ Yes ☐ No	☐ Install hearing-aid compatible phone.
108. Is the phone adapted with volume control? ☐ Yes ☐ No	☐ Have volume control added.
109. Is it identified with proper signage (symbol of telephone earpiece with radiating sound waves)? ☐ Yes ☐ No	☐ Add signage.

ACCESS ELEMENT E (cont.)	POSSIBLE SOLUTIONS
110. If there are public pay phones, is one equipped with a text telephone (TTY)? ☐ Yes ☐ No ☐ N/A	☐ Install a text telephone. ☐ Have a TTY available. ☐ Provide a shelf and outlet next to standard phone.
111. Is the location of a text telephone identified by accessible signage with the international TTY symbol? ☐ Yes ☐ No	☐ Add signage.

ACCESS ELEMENT F: COMMUNICATIONS	POSSIBLE SOLUTIONS
PA CareerLinks® and UC Service Centers must ensure effective communication with individuals with disabilities.	
Information in Alternative Formats 116. Upon request, are you able to provide literature, posting information, and audio-visual materials in formats which are understandable to persons with visual, hearing, learning and cognitive impairments? ☐ Yes ☐ No	☐ Write information in concrete terms supplemented with graphics. ☐ Develop and keep up-to-date a Resource List of services available in your area for ASL content interpretation, taping, Braille and publishing materials in large print. ☐ Develop an active network with community-based organizations that serve individuals with disabilities. ☐ Open caption all videos.
Auxiliary Aids 117. Are you able to provide appropriate auxiliary aids to ensure that communications with individuals with hearing, vision or speech impairment are as effective as communications with others? ☐ Yes ☐ No *(Note that a written plan should be available so that all staff can locate, request, and obtain auxiliary aids.)*	Auxiliary aids include service or devices as: ☐ Registered sign language interpreters/ Relay Service ☐ Assistive listening devices ☐ Televisions with captioning capability ☐ Telecommunications devices for deaf persons (TTY) ☐ Captioned Telephone/Videophone ☐ Readers ☐ Taped texts ☐ Braille materials and large print materials ☐ CD or DVD.

ACCESS ELEMENT F (cont.)	POSSIBLE SOLUTIONS
118. Have you developed a budget for auxiliary aids which must be provided without charge to participants upon request? ☐ Yes ☐ No	☐ If No, the budget will be developed for th next fiscal year by _____ (date)
119. Is staff provided with on-going training in the use of auxiliary aids and the procedures to obtain them? ☐ Yes ☐ No (Note: Resources and contacts available in Section E.)	☐ If No, training will be developed and delivered by: _____ (date)
Information Technology	
120. Are you able to provide alternative access to a job network or other services delivered through a computer? ☐ Yes ☐ No ☐ N/A for UCSC (Note: staff should be trained in how to turn on the captions in different programs and websites so that videos and other graphics with sound can be viewed with the captions.)	☐ Have at least one staff member available to read and type for an individual with a visual impairment or assist an individual with a cognitive or hearing impairment. ☐ Provide adjustable workstation furniture that can be raised and lowered to accommodate the needs of the customer ☐ Provide printed output at waist height. ☐ Provide workstations that are designed to accommodate wheelchairs. ☐ Provide universal workstation aids, such as a track ball, wrist rests and articulated forearm rests that can be adapted to the individual user. ☐ Consider configuring workstations with 17" or 21" monitors to accommodate the sight impaired. ☐ Equip workstations with a screen magnifyer and a keyboard with large print keytop labels for easy viewing. ☐ Incorporate Braille printing, screen reading software with speech synthesizer or possibly speech input into the workstation configuration in accordance with industry standards addressing compatibility.

ACCESS ELEMENT F (cont.)	POSSIBLE SOLUTIONS
121. **FOR CAREERLINKS® ONLY:** Are each of the following items available in the Career Resource Area: a. Adjustable height table for personal computer (Physical & Visual access) ☐ Yes ☐ No b. Alternate mini keyboard (Physical access) ☐ Yes ☐ No c. Alternate track ball mouse (Physical access) ☐ Yes ☐ No d. Foam wrist rest (Physical access) ☐ Yes ☐ No e. Low glare screen filter (Visual access) ☐ Yes ☐ No f. Monitor arm (Adjustable positioning to increase viewing position) ☐ Yes ☐ No g. Screen magnification software (Enlargement of screen information) ☐ Yes ☐ No h. Lynx Browser (Text browser) ☐ Yes ☐ No i. Speech output (Voice for browser) ☐ Yes ☐ No j. Assistive Listening Devices (Amplification for one-to-one or group communication) ☐ Yes ☐ No k. TTY (Text telephone) or Video Relay ☐ Yes ☐ No	☐ Purchase/acquire items

ACCESS ELEMENT G: EMERGENCY EVACUATION	POSSIBLE SOLUTIONS
PA CareerLinks® and UC Service Centers must ensure the safety of employees and participants with disabilities during emergencies.	
Evacuation Plan 122. Do you have an emergency evacuation plan that identifies the individuals who need assistance, roles of key staff, egress routes, emergency contact telephone numbers, debriefing and counseling services? ☐ Yes ☐ No	☐ The evacuation plan will be developed and in place by: _____ (date)
123. Does the emergency warning system include both audible alarms and a system of flashing lights in both public and private areas? ☐ Yes ☐ No	☐ Install an emergency warning system of both audible alarm and flashing lights. ☐ Develop an alert system capable of providing appropriate notice to all employees and participants.

ACCESS ELEMENT H: STAFF DEVELOPMENT	POSSIBLE SOLUTIONS
Staff must be knowledgeable of the PA CareerLink's® or UC Service Center's legal obligations with respect to compliance with the Americans with Disabilities Act (ADA) Title II, the Rehabilitation Act (Section 504) and the Nondiscrimination and Equal Opportunity Regulations for the Workforce Investment Act.	
124. Do you provide staff training and development in the following areas: Disability Awareness ☐ Yes ☐ No Civil Rights ☐ Yes ☐ No Confidentiality ☐ Yes ☐ No Ethics ☐ Yes ☐ No Conflict Management ☐ Yes ☐ No Work Place Diversity ☐ Yes ☐ No	☐ Develop an Individualized Development Plan for each staff member covering the competencies indicated. ☐ Develop quick reference guidelines for staff to use when greeting individuals with disabilities as well as all customers entering the One-Stop Center. ☐ Provide staff training.

ACCESS ELEMENT I: ACCESS TO PUBLIC MEETINGS	POSSIBLE SOLUTIONS
PA CareerLink and UC Service Center activities must be held only in accessible buildings when accessibility is needed for staff or participants.	
Public Meetings and Training Policies	
125. Do your policies and practices provide individuals with disabilities with equal participation in public meetings and training sessions? ☐ Yes ☐ No	☐ Send meeting notices that include the process for requesting reasonable accommodation and the name of a contact person and telephone/TTY number. ☐ Put meeting notices on local TV in open captioned format and radio as well as newspapers for people with visual or cognitive impairments. ☐ Provide individuals with allergies or environmental illness an opportunity to request a fragrance-free environment. If this is the case, notify all participants to refrain from wearing heavily scented products and to air out dry-cleaned clothes. ☐ Provide information about bus routes, parking and physical accessibility. ☐ Arrange the seating for wheelchair accessibility.

Facility Name: _____

Address: _____

Completed By: _____
(typed name)

_____
(signature)

Date Completed: _____ **Phone Number:** _____

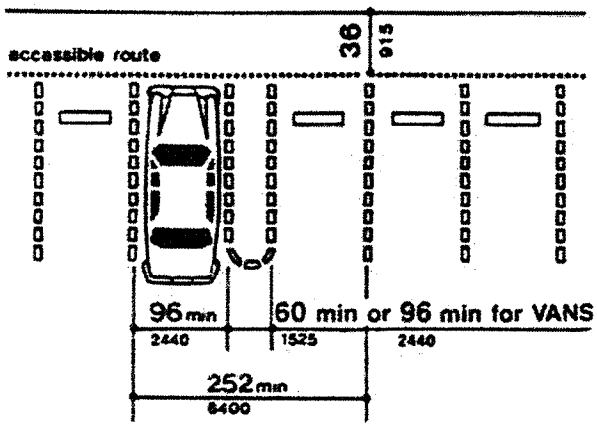

Dimensions of Parking Spaces

Figure 1

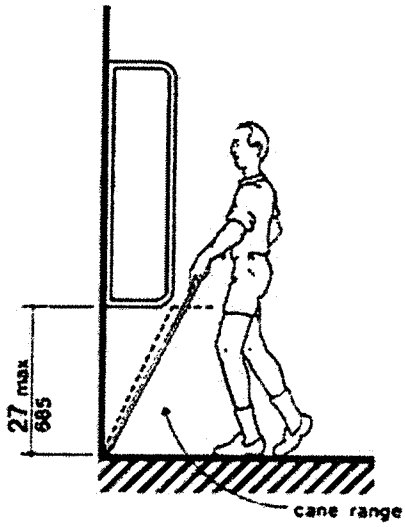

Walking Perpendicular to a Wall

Figure 2(a)

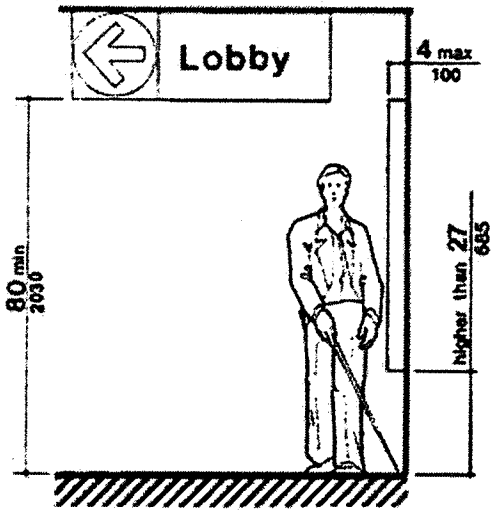

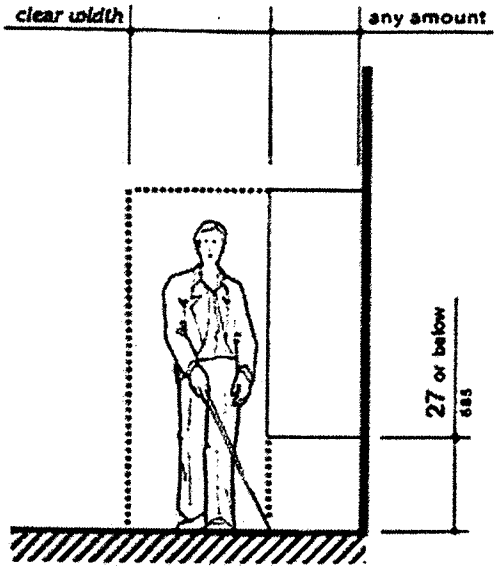

Walking Parallel to a Wall

Figure 2(b)

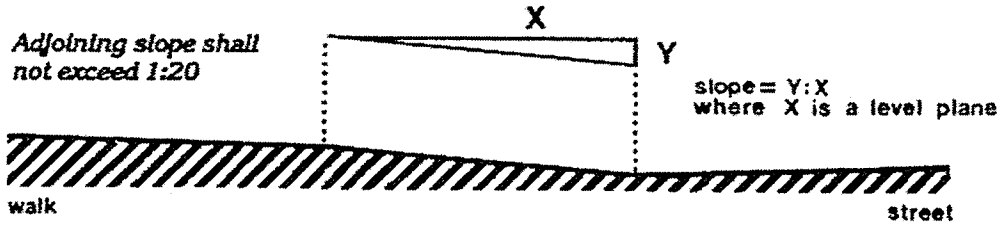

Measurement of Curb Ramp Slopes

Figure 3

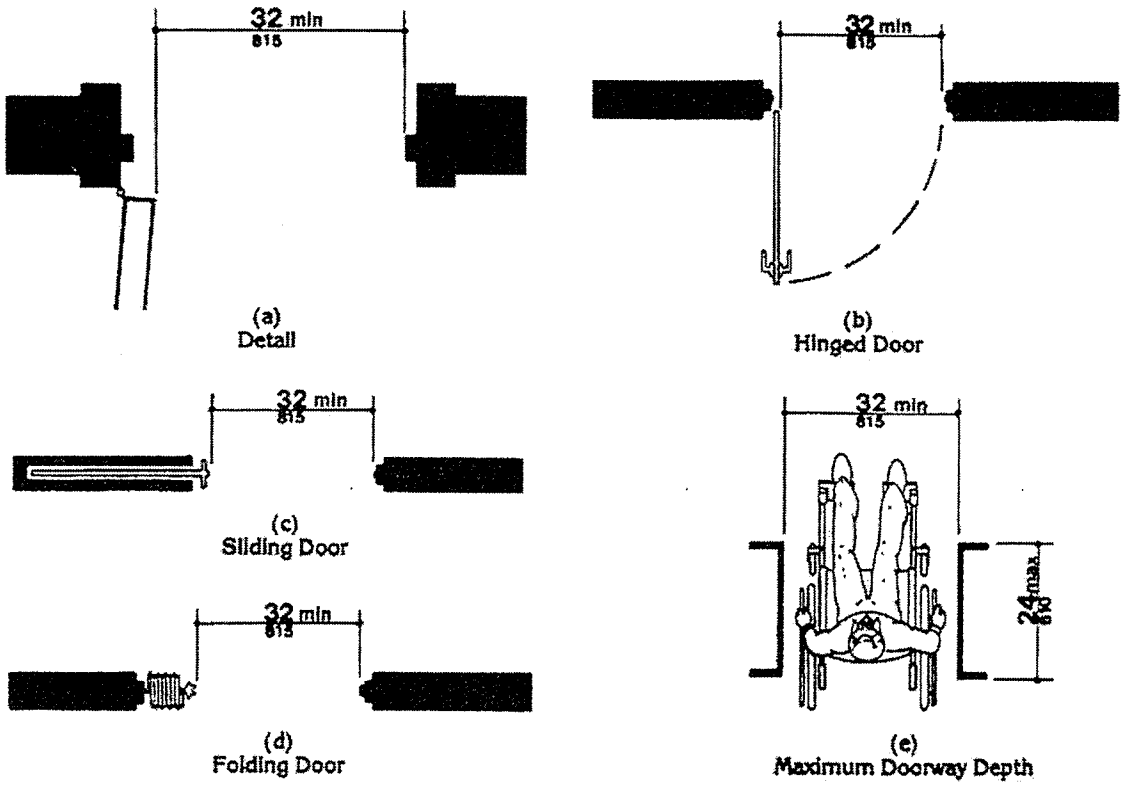

Clear Doorway Width and Depth

Figure 4

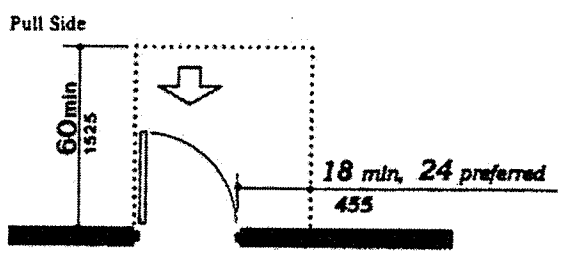

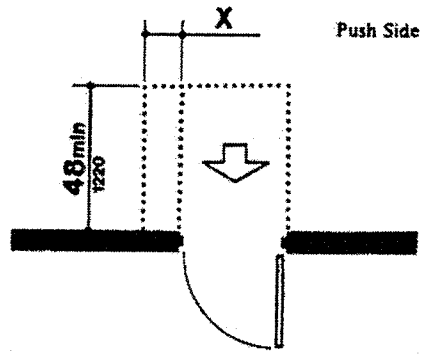

NOTE: x = 12 in (305 mm) if door has both a closer and latch.

(a)
Front Approaches — Swinging Doors

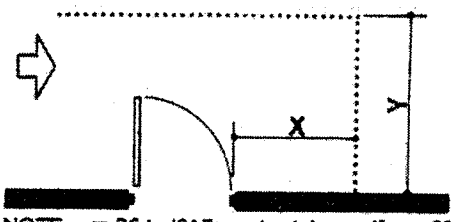

NOTE: x = 36 in (915 mm) minimum if y = 60 in (1525 mm); x = 42 in (1065 mm) minimum if y = 54 in (1370 mm).

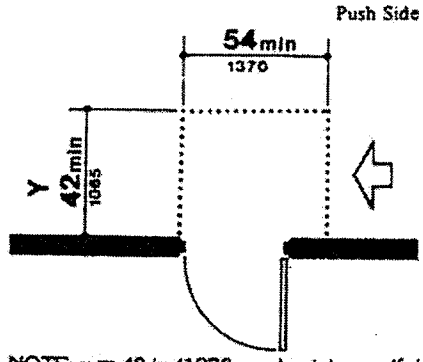

NOTE: y = 48 in (1220 mm) minimum if door has both a latch and closer.

(b)
Hinge Side Approaches — Swinging Doors

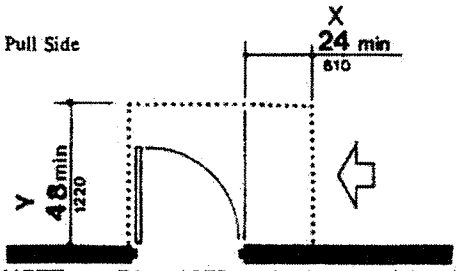

NOTE: y = 54 in (1370 mm) minimum if door has closer.

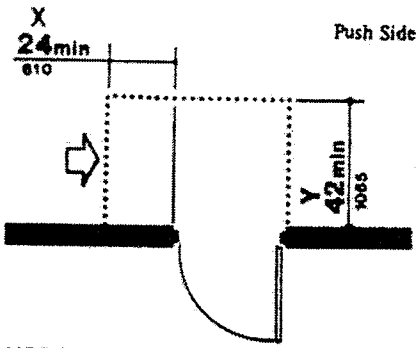

NOTE: y = 48 in (1220 mm) minimum if door has closer.

(c)
Latch Side Approaches — Swinging Doors

NOTE: All doors in alcoves shall comply with the clearances for front approaches.

Maneuvering Clearances at Doors

Figure 5(a)

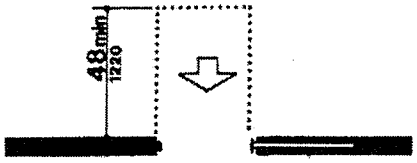

(d)
Front Approach — Sliding Doors *and Folding Doors*

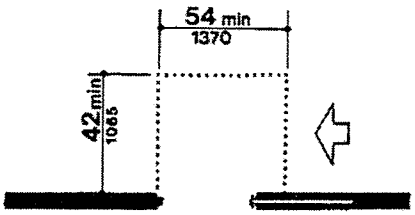

(e)
Slide Side Approach — Sliding Doors *and Folding Doors*

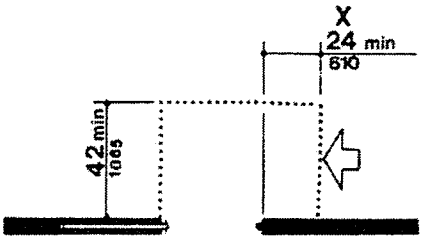

(f)
Latch Side Approach — Sliding Doors *and Folding Doors*

NOTE: All doors in alcoves shall comply with the clearances for front approaches.

Maneuvering Clearances at Doors *(Continued)*

Figure 5(b)

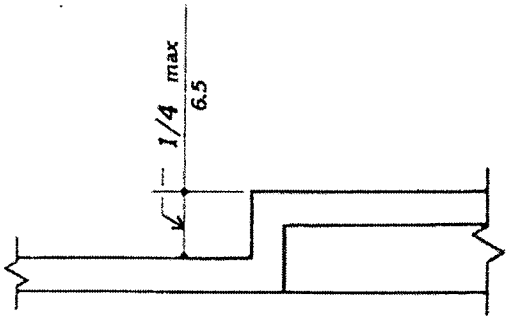

(c)
Changes in level

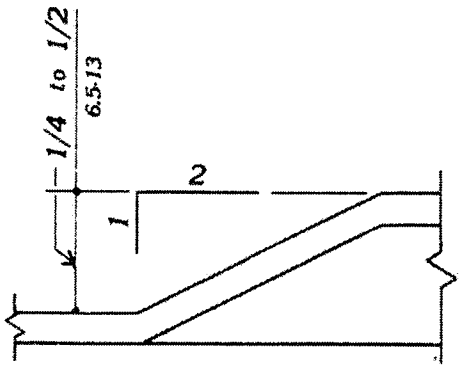

(d)
Changes in level

Thresholds

Figure 6

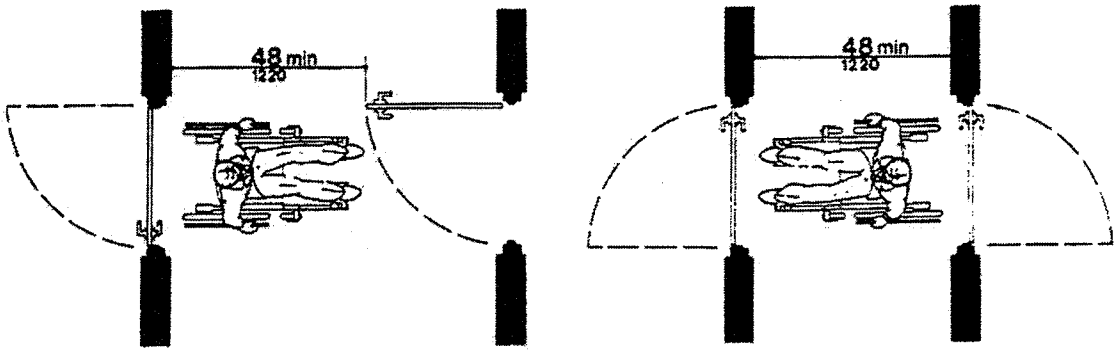

Two Hinged Doors in Series

Figure 7

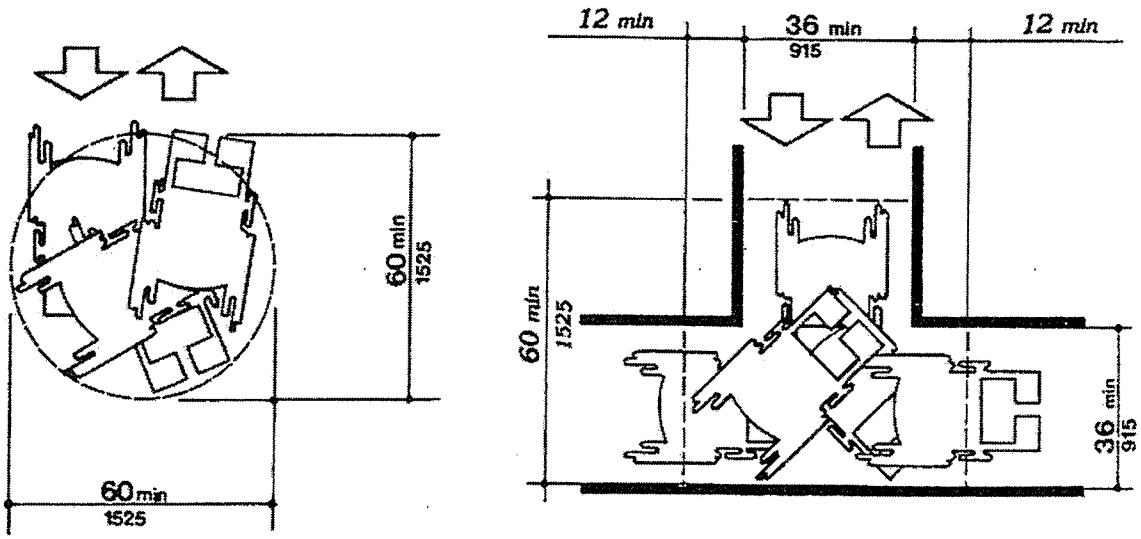

(a)
60-in (1525-mm)-Diameter Space

(b)
T-Shaped Space for 180° Turns

Wheelchair Turning Space

Figure 8

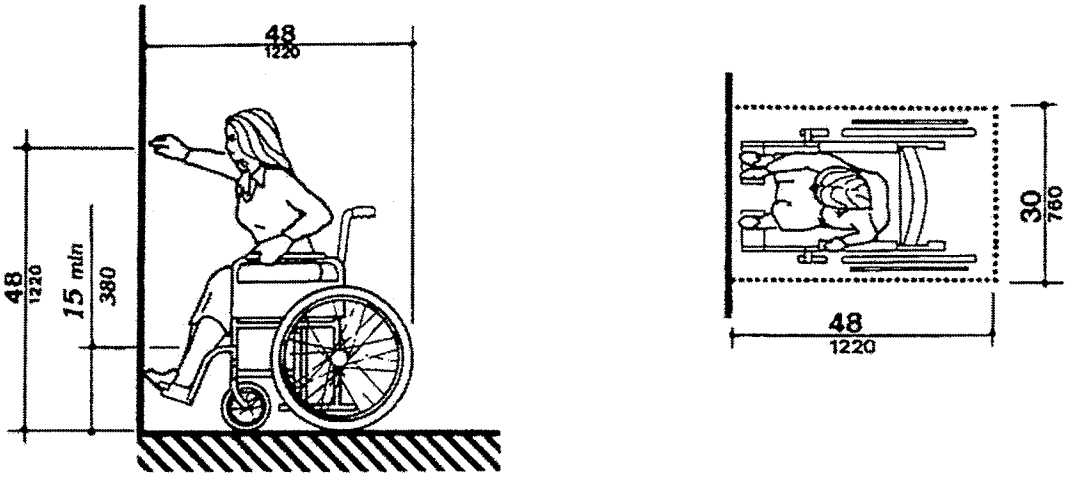

High Forward Reach Limit

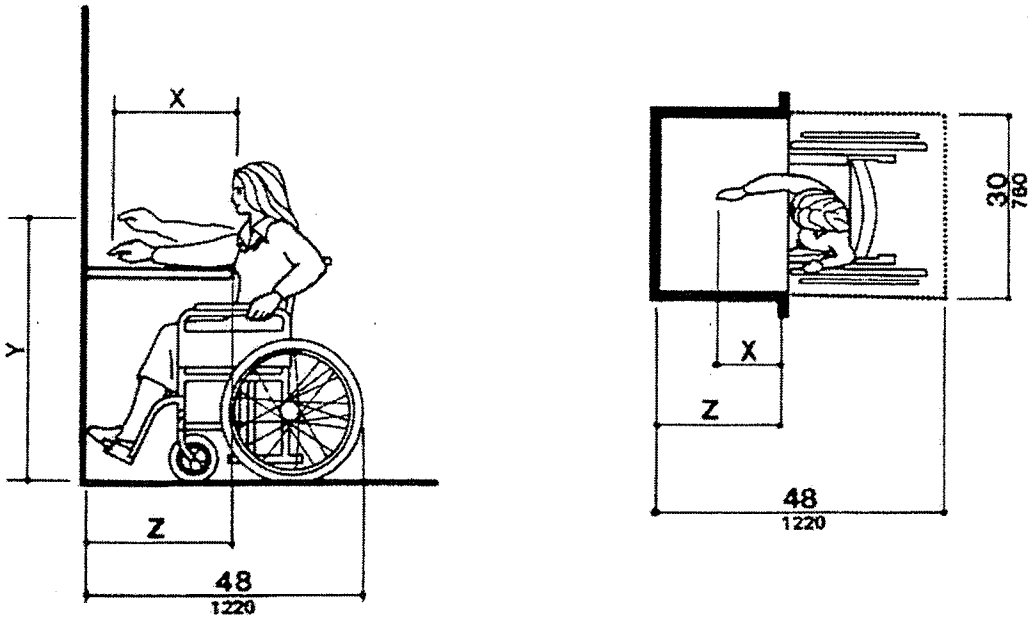

NOTE: x shall be ≤ 25 in (635 mm); z shall be ≥ x. When x < 20 in (510 mm), then y shall be 48 in (1220 mm) maximum. When x is 20 to 25 in (510 to 635 mm), then y shall be 44 in (1120 mm) maximum.

Maximum Forward Reach over an Obstruction

Forward Reach

Figure 9(a)

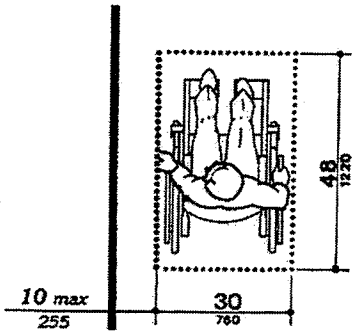

(a)
Clear Floor Space Parallel Approach

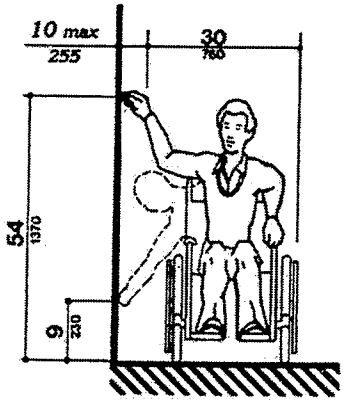

(b)
High and Low Side Reach Limits

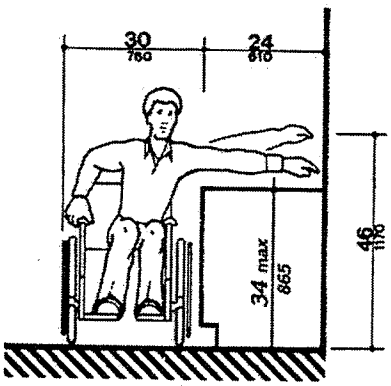

Maximum Side Reach over Obstruction

Side Reach

Figure 9(b)

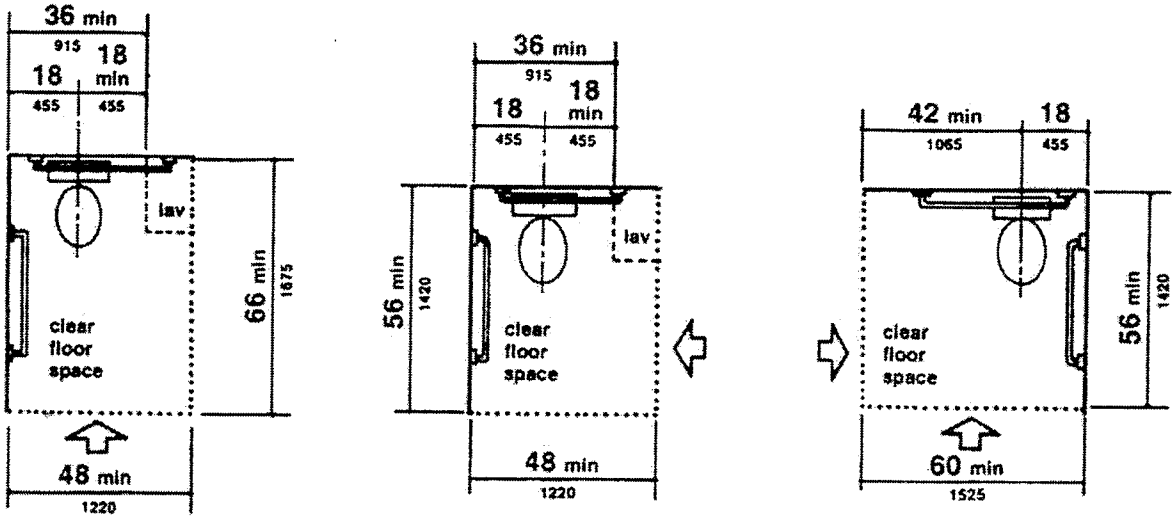

Clear Floor Space at Water Closets

Figure 10

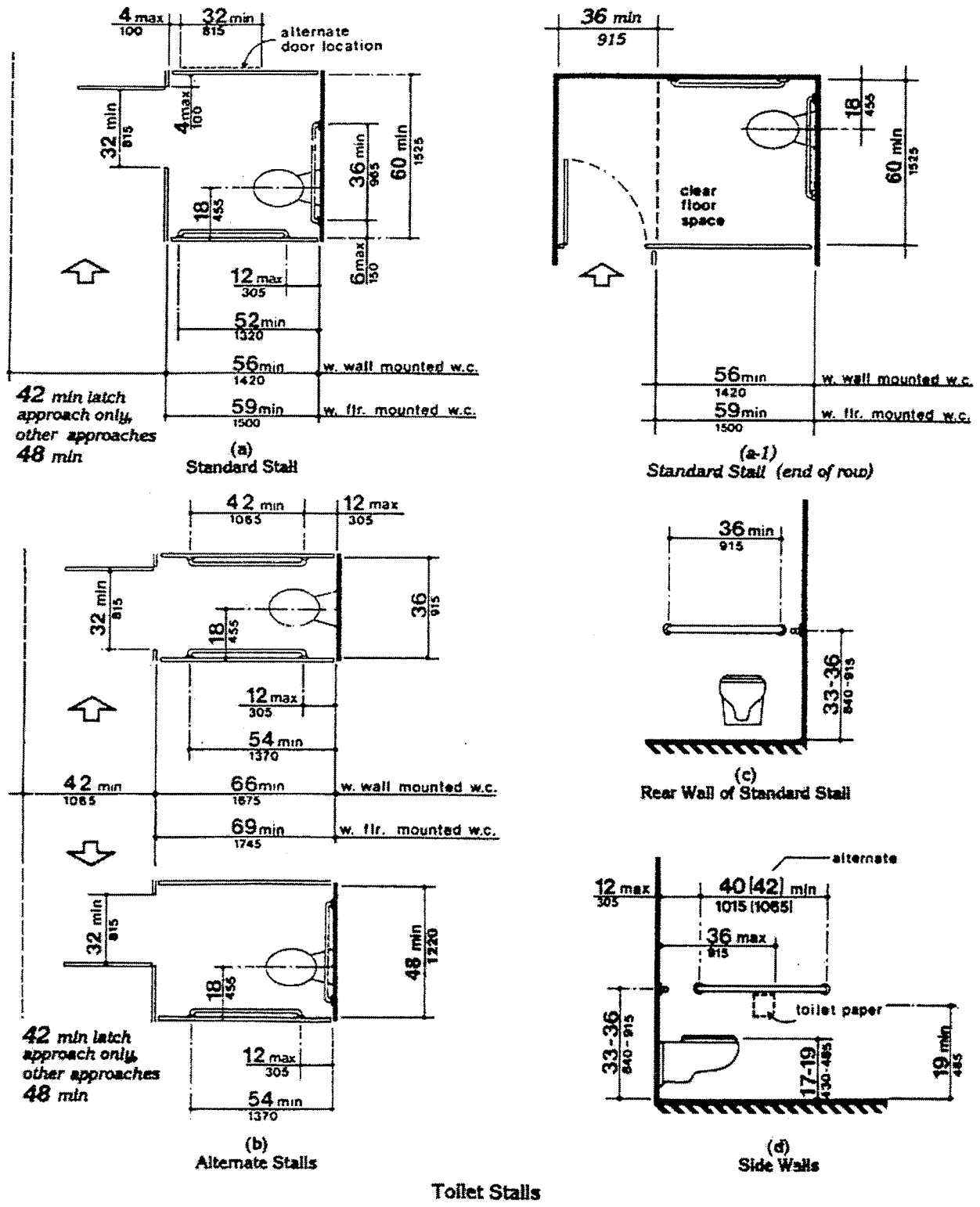
4 max 100
32 min 815
alternate door location
32 min 815
4 max 100
36 min 915
60 min 1525
18 455
6 max 150
12 max 305
52 min 1320
56 min 1420
w. wall mounted w.c.
59 min 1500
w. flr. mounted w.c.
42 min latch approach only, other approaches 48 min
(a)
Standard Stall
36 min 915
18 455
60 min 1525
clear floor space
56 min 1420
w. wall mounted w.c.
59 min 1500
w. flr. mounted w.c.
(a-1)
Standard Stall (end of row)
42 min 1065
12 max 305
32 min 815
18 455
36 915
12 max 305
54 min 1370
42 min 1065
66 min 1675
w. wall mounted w.c.
69 min 1745
w. flr. mounted w.c.
32 min 815
18 455
48 min 1220
42 min latch approach only, other approaches 48 min
12 max 305
54 min 1370
(b)
Alternate Stalls
36 min 915
33-36 840-915
(c)
Rear Wall of Standard Stall
alternate
12 max 305
40 [42] min 1015 [1065]
36 max 915
toilet paper
33-36 840-915
17-19 430-485
19 min 485
(d)
Side Walls
Toilet Stalls

Figure 11

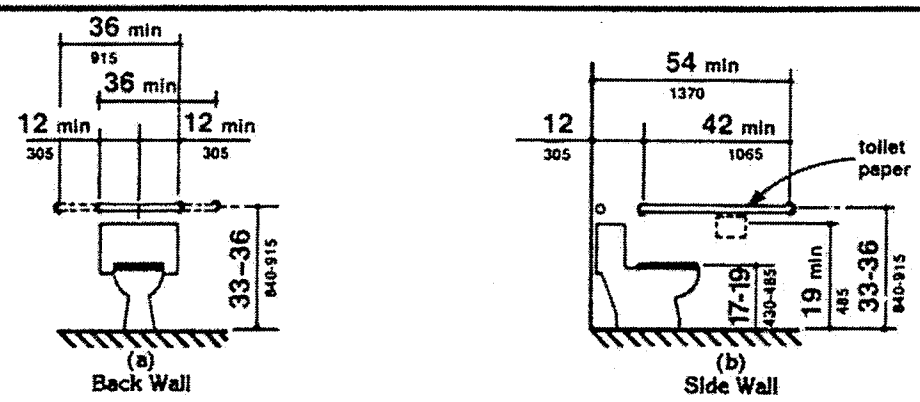

Grab Bars at Water Closets

Figure 12

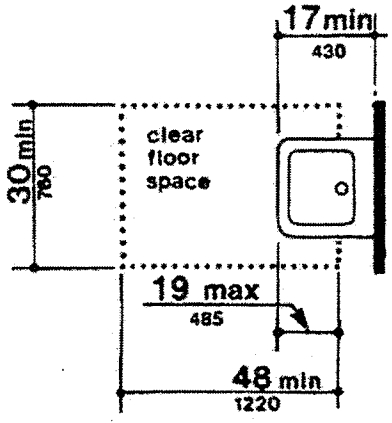

Clear Floor Space at Lavatories

Figure 13

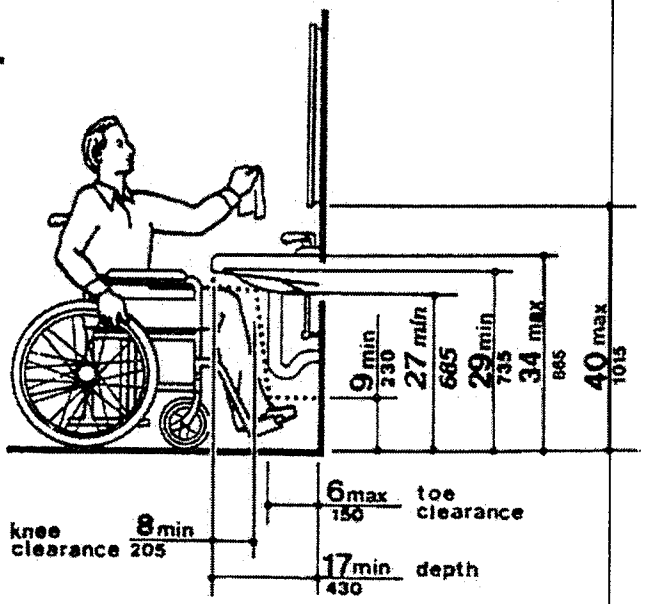

Lavatory Clearances

Figure 14

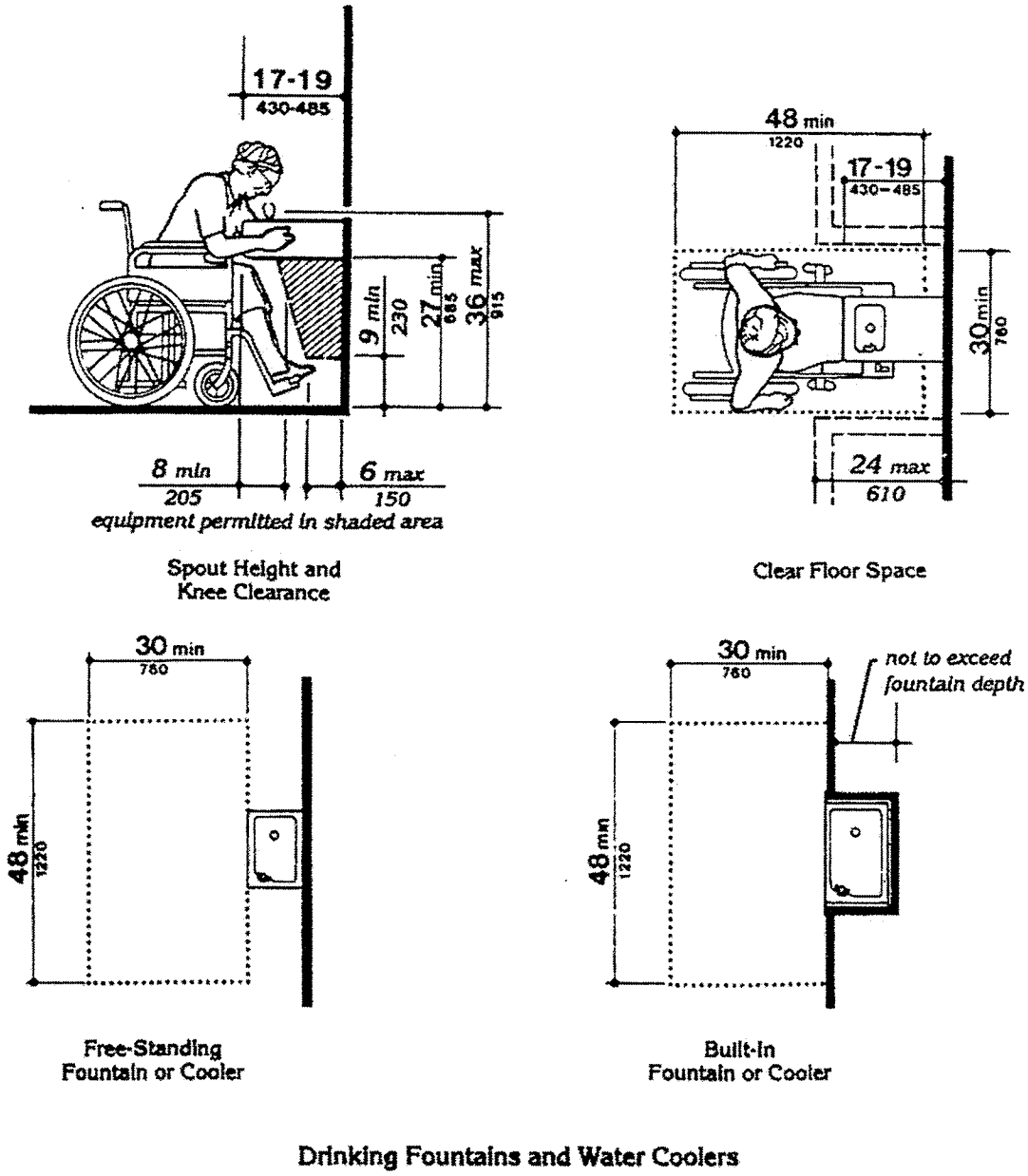

Drinking Fountains and Water Coolers

Figure 15

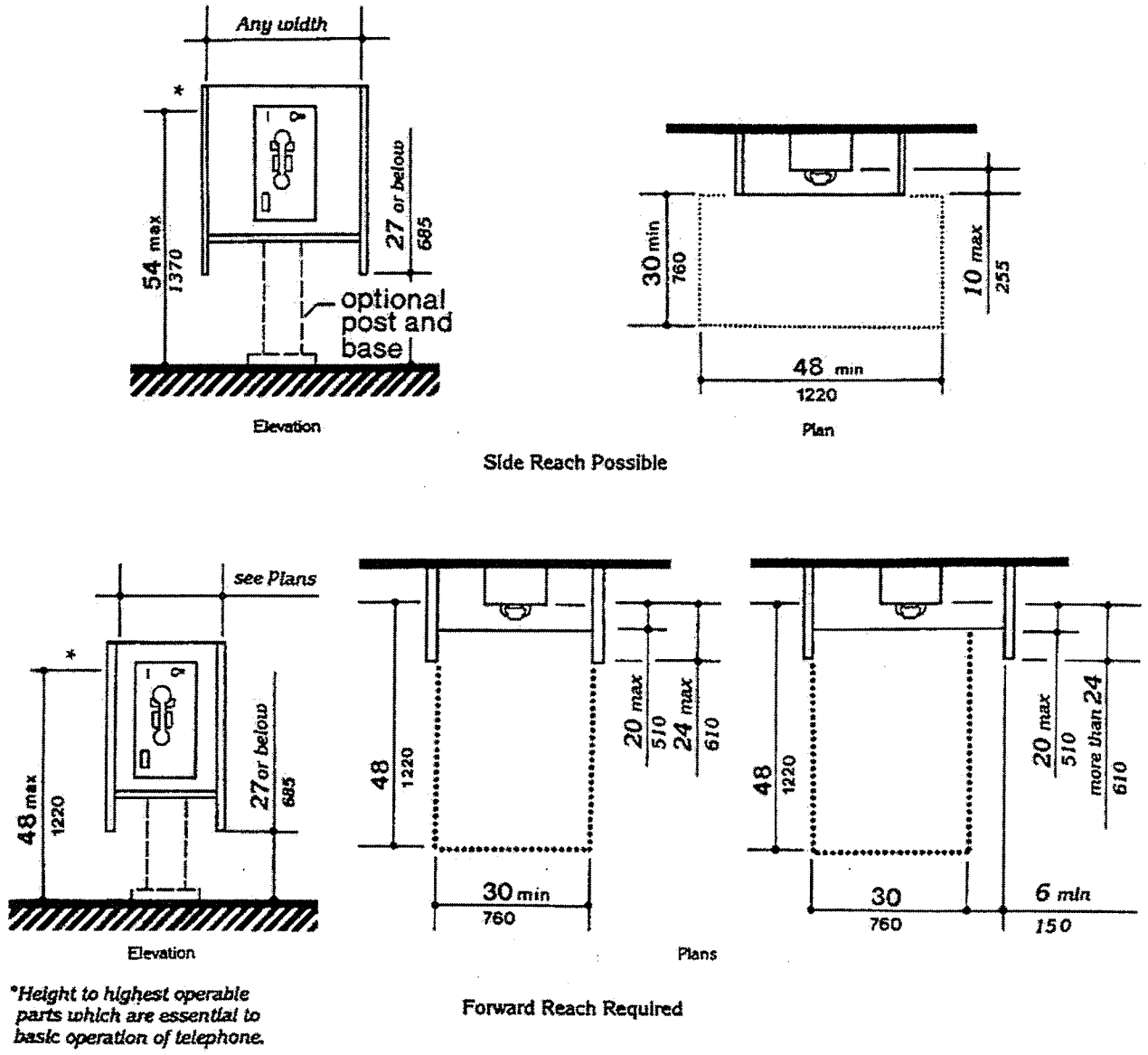

Mounting Heights and Clearances for Telephones

Figure 16

SECTION D:
CORRECTIVE ACTION PLAN (CAP)

If deficiencies are found in either program or physical access, a Corrective Action Plan (CAP) must be developed to identify the deficiencies and to provide a schedule of activities for improvement. The CAP is required under the Americans with Disabilities Act (ADA) to continue the effort to affect changes in the way public entities do business, and also serves as corrective action planning for the Compliance Review Division. Title 28 of the Code of Federal Regulations Part 35 states that public entities, which employ 50 or more persons, that need structural changes to facilities to achieve program accessibility, shall develop a transition plan setting forth the steps necessary to complete such changes. At a minimum, the CAP should contain the following information:

- A list of the physical/program barriers that limit access to programs and services for people with disabilities;
- A detailed outline of the methods to be used in removing barriers and making programs accessible;
- A schedule for taking necessary steps to achieve compliance. If the time period for achieving compliance is to be longer than one year, the CAP should identify interim steps to be taken to achieve program access; and
- The name of the official person responsible for implementing the CAP.

In addition, Pennsylvania expects each Local Workforce Investment Area (LWIA), PA CareerLink®, and UC Service Center to establish physical and program access goals that go beyond minimal legal compliance. Goals should be developed for various physical and program access elements and should be focused on creating an environment that is not just accessible, but that is comfortable and welcoming to all customers. Goals may be established for any of the access elements whether or not the element reflects an access deficiency. The goals have to do with "quality of life" issues that articulate what must be accomplished in order to make the physical and program environments the most welcoming, comfortable, and satisfying for all customers, including persons with disabilities. While these goals may not all be immediately obtainable, they should serve as reasonable objectives in the effort to provide truly universal and welcoming access for the entire community .

Page D-2 contains a discussion of the CAP and the use of the CAP template. The template itself begins on page D-4 and is available electronically in Microsoft Excel. Transition planners may use the electronic template, or re-create their own.

Corrective Action Plan (CAP) Template

Attached is a Corrective Action Plan format for LWIAs, PA CareerLinks®, and UC Service Centers to use for any necessary barrier removal planning. It includes a plan for program access issues (Section One), architectural modifications (Section Two), curb cuts and curb ramps (Section Three), and an explanation for issues not to be corrected due to an unreasonable hardship (Section Four). Sections One and Two should be completed for each facility, listing all barriers to be removed, descriptions of the necessary architectural modifications necessary to remove barriers, cost estimates and the anticipated year of completion.

If an LWIA, PA CareerLink®, or UC Service Center has responsibility or authority over streets, roads, or walkways, the Corrective Action Plan should include a schedule for providing curb ramps, or other sloped areas, where pedestrian walks cross curbs. If applicable, Section Two should be used to list the locations of curb cuts and curb ramps needed to provide access to the sidewalks and pedestrian ways controlled by the LWIA, PA CareerLink®, or UC Service Center. A single unit cost can be estimated unless there are unusual conditions requiring extensive ramping. An estimated completion date for each curb ramp and curb cut should also be entered. It is useful to attach a map of the streets and walkways to the CAP. Numbers can then be shown in section two that correspond to numbered locations on the map.

Barriers in Sections One and Two should be prioritized when entered on the CAP. Input from persons with disabilities can assist with setting priorities for the implementation of improvements. High priority items should be corrected first. Until a barrier is removed, services should be provided through an "equivalent facilitation." The term "equivalent facilitation" is defined as an accommodation that allows a person with a disability to perform essential functions in the same manner as other employees or customers.

Section Four identifies barriers that will not be removed because to do so would impose an unreasonable financial or administrative hardship. The term "unreasonable hardship" is defined as an ADA deficiency that requires significant difficulty to correct.

Factors that should be considered in determining unreasonable hardship include:

- The nature and cost of the accommodation;
- Financial resources;
- The technical feasibility to correct a deficiency, which means mitigation cannot be accomplished because existing structural conditions would require removing or altering a load-bearing member that is an essential part of the structural frame; or because other existing physical or site constraints prohibit modification or addition of elements, spaces or features; and
- Whether or not the facility is a historical building, which may prohibit some types of alterations

Unreasonable hardship is not to be used as an excuse for noncompliance. Every effort to correct deficiencies should be made. Budgetary constraints or other factors that support an unreasonable hardship claim must be described in detail in Section Four. The unreasonable hardship determination must be made by an official with budgetary authority. For deficiencies that will not be corrected, a description of the steps to be taken in lieu of barrier removal, such as an equivalent facilitation, should be listed in section three.

Once all sections are completed, they will provide a basis for the draft CAP. The proposed plan should be made available to the public for comment. A public meeting is an effective way of providing persons with disabilities, representative organizations, and other concerned parties with an opportunity to comment on and discuss the CAP. An actively involved advisory group comprised of individuals with disabilities is another way to get participation in the development of the CAP.

To complete the CAP, revise the draft as necessary in response to the comments received from persons with disabilities. Finalize the CAP along with any other supporting documentation. Secure approval as necessary and have the official responsible for implementation sign the final CAP.

Once barrier removal has begun, the CAP should be updated to show the LWIA, PA CareerLink®, or UC Service Center progress. Establishing completion dates, modifying, checking, and updating the plan can help reduce discrimination complaints and alleviate possible litigation by establishing a public entity's good faith efforts to comply with the Title II ADA requirements.

CORRECTIVE ACTION PLAN (CAP)
SECTION ONE – PROGRAM ACCESS SOLUTIONS

Location where program occurs _____ **Program Name:** _____

Worksheet completed by: _____ **Telephone #:** _____ **Date:** _____

Description of Program Barrier	Description of the Proposed Solution	Description of Equivalent Facilitation to be Provided Until Barrier Removal Occurs	Cost Estimate	Implementation Schedule				
				2012	2013	2014	2015	2016
			TOTAL					

Signature of Official Responsible for Implementation: _____
(Attach list of persons with disabilities who have commented)

Page _____ **of** _____

CORRECTIVE ACTION PLAN (CAP)
SECTION TWO – SUMMARY OF ARCHITECTURAL MODIFICATIONS

Facility Name and Address: _____ **Total Number of Facilities:** _____

Worksheet completed by: _____ **Telephone #:** _____ **Date:** _____

Description and Location of Physical Barrier (in order of priority)	Description Regarding the Type of Barrier Removal Required	Description of Equivalent Facilitation to be Provided Until Barrier Removal Occurs	Cost Estimate	Implementation Schedule				
				2012	2013	2014	2015	2016
			TOTAL					

Signature of Official Responsible for Implementation: _____
(Attach list of persons with disabilities who have commented)

Page _____ **of** _____

CORRECTIVE ACTION PLAN (CAP)
SECTION THREE – CURB CUTS AND CURB RAMPS

Facility Name and Address: _____ **Total Number of Curb Cuts/Ramps:** _____

Worksheet completed by: _____ **Telephone #:** _____ **Date:** _____

Locations Where Curb Cuts and Curb Ramps Are Needed (or map code number)	Cost Estimate	Implementation Schedule				
		2012	2013	2014	2015	2016
	TOTAL					

Signature of Official Responsible for Implementation: _____
(Attach list of persons with disabilities who have commented)

Page _____ **of** _____

CORRECTIVE ACTION PLAN (CAP)
SECTION FOUR – UNREASONABLE HARDSHIP

Facility Name and Address: _____ **Total Number of Facilities:** _____

Worksheet completed by: _____ **Telephone #:** _____ **Date:** _____

Description and Location of Barrier	Description Regarding the Type of Barrier Removal Required	Cost Estimate	Explanation of Unreasonable Hardship	Description of Equivalent Facilitation to be Provided in Lieu of Barrier Removal
		TOTAL		

Signature of Official Responsible for Implementation: _____
(Attach list of persons with disabilities who have commented)

Page _____ **of** _____

SECTION E:
RESOURCES

This section contains a list of resources that may be of assistance to Local Workforce Investment Areas, PA CareerLinks®, and UC Service Centers as they assess and address physical and program access issues within their facilities. The list contains the best information available at the time of its development and will be expanded, edited, and updated periodically. The list includes both public and private organizations that distribute publications and/or provide other assistance relating to physical and program access.

Physical and program access compliance is not a one-time proposition. It will not be finished when the self-assessment process is completed or even when the last piece of the Corrective Action Plan has been completed. Access compliance is an on-going process. The Physical and Program Access Self-Assessment will, as a part of the monitoring process, be completed at least once annually in order to identify and correct problems as they arise. In addition, full compliance may not be achieved quickly. It may take several years to fully implement the CAP The most important aspect of this endeavor is to make a good faith effort towards compliance and to promote a long-term cultural change regarding physical and program access in the PA CareerLinks® and UC Service Centers. The following resource list provides invaluable tools in this ongoing effort.

The Office of Equal Opportunity does not control or guarantee the accuracy, relevance or completeness of information provided by other sources, including website links and service agencies offered as resources. Further, mentioning these website links and service agencies is not intended to reflect their importance, nor to endorse any product or service offered by each; rather, the list is offered as a partial grouping of both State and National capacity building tools.

ABLEDATA www.abledata.com
Provides information on assistive technology and rehabilitation equipment available from domestic and international sources to consumers, organizations, professionals, and caregivers within the United States. The ABLEDATA database contains information on more than 29,000 assistive technology products, detailed descriptions of each product, and information on non-commercial prototypes, customized and one-of-a-kind products, and do-it-yourself designs.

ABLEDATA
8630 Fenton Street, Suite 930
Silver Springs, MD 20910

Phone: (800)-227-0216
TTY: (301) 608-8912
Fax: (301) 608-8958

The Access Board www.access-board.gov
Contains information on Section 508 of the Rehabilitation Act, as amended requiring that electronic and information technology developed, procured, maintained, or used by the federal government be accessible to people with disabilities. The Access Board is an independent federal agency.

The Access Board
1331 F Street, NW
Suite 1000
Washington, DC 20004-1111

Voice: (202) 272-5434
TTY: (202) 272-5449
Fax: (202) 272-5447
Toll: (800) 872-2253
Toll TTY: (800) 993-2822

Access for All: A Resource Manual for Meeting the Needs of One-Stop Customers with Disabilities
www.communityinclusion.org/onestop/onestopmanual.html
Serves as a training and staff development tool for enhancing the ability of the One-Stop System to meet the needs of customers with disabilities, and also as a reference work for ongoing use in serving people with disabilities.

Institute for Community Inclusion/UCE
300 Longwood Avenue
Boston, Massachusetts 02115

Voice: (617) 355-6506
TTY: (617) 355-5853
Fax: (617) 739-6956

The Alliance for Technology Access www.ataccess.org
Provides information and support services to children and adults with disabilities through a network of community-based resource centers, developers and vendors, affiliates, and associates working to increasing the use of assistive technology to people with disabilities.

The Alliance for Technology Access
2175 E Francisco Boulevard, Suite L
San Rafael, California 94901

Voice: (415) 455-4575
TTY: (415) 455-0491
Fax: (415) 455-0654

Apple Computer, Inc., Worldwide Disability Solutions Group
www.apple.com/disability/
Works with key education, rehabilitation and advocacy organizations nationwide to identify computer-related needs of people with disabilities and to help develop responsive programs.

Apple Technologies
1 Infinite Loop
Cupertino, California 95014

Voice: (800) 776-2333

Assistivetech.net www.assistivetech.net
Provides online up-to-date information on assistive technologies, adaptive environments and community resources focusing on the needs of people with disabilities, including their families, service providers and members of their communities.

Georgia Tech Center for Assistive Technology
and Environmental Access
490 Tenth Street, NW
Atlanta, Georgia 30332-0156

Toll: (800) 726-9119
Phone: (408) 894-0240
Fax: (404) 894-9320

Center of Assistive Rehabilitative Technology (CART)
http://www.portal.state.pa.us/portal/server.pt/community/student_services/17350/center_of_assitive_rehabilitative_technology/1085547
Highly trained specialists evaluate customers' abilities and match them with appropriate assistive technology to maximize independence in the home, school and/or work environments. Assistive technology assessment is provided in the areas of positioning and mobility, computer access, environmental controls, driver assessment and vehicle modification, devices for activities of daily living, devices for visual and/or auditory impairments, and home/school/work modifications specific to architectural barriers and ergonomics. Assessment, equipment recommendations, and training needs are addressed by CART staff.

CART also offers a customized program which provides more extensive assistive technology training for an individualized period of time, ranging from several days to several months, thus requiring a residential stay at HGAC. This program provides feedback on customers' abilities to function independently in a post-secondary school or work environment. The assistive technology needs required to achieve customers' individual goals are explored, modified and implemented in a variety of settings, such as CART training labs, work tryouts and job shadowing experiences. Outcomes of the customized program are intended to assist customers to transition to school or work in the most effective and efficient manner.

Tammy Pelleschi, BS, OTR/L, ATP, CART
Program Manager

1-800-762-4211 ext. 0599
or 814-254-0599

IBM Accessibility Center www-3.ibm.com/able/accessweb.html
Brings together product and service information for people with disabilities, and for human resource professionals who are proactively seeking knowledge about solutions or empowering people with disabilities to ensure a productive working environment.

IBM Accessibility Center
11400 Burnet Road
Austin, Texas 78758

Phone: (800) 426-4832
TTY: (800) 426-3383

Justice, United States Department of www.usdoj.gov/crt/ada/adahom1.htm
Provides information for businesses including the Americans with Disabilities Act, business briefs, design standards, and regulations.

United States Department of Justice
950 Pennsylvania Avenue, NW
Civil Rights Division, Disability Rights Section - NYAVE
Washington, DC 20530

Fax: (202) 307-1198

Mid-Atlantic ADA Center www.adainfo.org
Provides information, guidance and training on the Americans with Disabilities Act (ADA), tailored to meet the needs of businesses, government entities, organizations, and individuals in the Mid-Atlantic Region (DC, DE, MD, PA, VA, and WV). A part of the ADA National Network that provides personalized assistance to educate the public about the ADA. Not an enforcement or regulatory agency, but a helpful resource for obtaining information and guidance on compliance with the requirements of the ADA.

Transcen, Inc.
401 N. Washington Street, Suite 450
Rockville, MD 20850

(301) 217-0124 v/tty
(800) 949-4232 v/tty
adainfo@transcen.org

Labor, United States Department of, Office of Disability Employment Policy
www.dol.gov/odep/welcome.html
Collaborates with employers and State and local agencies to increase awareness of the benefits of hiring people with disabilities, and to facilitate the use of effective strategies to expand access to training, education, employment supports, assistive technology, integrated employment, entrepreneurial development, and small-business opportunities.

Office of Disability Employment Policy
1331 F Street, N.W., Suite 300
Washington, DC 20004

Phone: (202) 376-6200
TTY: (202)-376-6219
Voice: (202) 376-6205

National Business and Disability Council www.business-disability.com
Provides the full range of services to assist corporations in successfully integrating people with disabilities into the workplace and marketplace.

National Business and Disability Council
201 I.U. Willets Road
Albertson, New York 11507

Phone: (516) 465-1515
Fax: (516) 465-3730

Office for the Deaf and Hard of Hearing
ODHH provides three primary services, represented by the acronym **AIR**.

- ADVOCACY for people with hearing loss who are not receiving proper services from government or private agencies.

- Distribution of INFORMATION and answering questions on issues relevant to people with hearing loss.

- REFERING people to appropriate organizations. ODHH is ready to serve as liaison, open doors, explain procedures and make referrals. No request is too small.

Office for the Deaf & Hard of Hearing
1521 North 6th Street
Harrisburg, PA 17102

717-783-4912 v/tty
PA only: 800-233-3008
Videophone: 717-831-1928

Office of Vocational Rehabilitation (OVR)
www.portal.state.pa.us/portal/server.pt/community/vocational_rehabilitation/10356
The Pennsylvania Office of Vocational Rehabilitation, or OVR, provides vocational rehabilitation services to help persons with disabilities prepare for, obtain, or maintain employment. OVR provides services to eligible individuals with disabilities, both directly and through a network of approved vendors. Services are provided on an individualized basis. The OVR counselor, during face-to-face interviews, assists customers in selecting their choice of vocational goals, services and service providers. An Individualized Plan for Employment (IPE) is developed, outlining a vocational objective, services, providers and responsibilities. Counseling and guidance, diagnostic services, assessments, information and referral, job development and placement, and personal services such as readers or sign language interpreters are provided at no cost to the individual.

Statewide there are 21 District Offices staffed with trained, professional Vocational Rehabilitation Counselors which serve Pennsylvania in all 67 counties. The Hiram G. Andrews Center in Johnstown provides vocational training and comprehensive rehabilitation services to people from across the state. OVR's Bureau of Blindness and Visual Services also provides specialized services to blind and visually impaired individuals.

Office of Vocational Rehabilitation
1521 North Sixth Street
Harrisburg, PA 17102

District Offices:
http://www.portal.state.pa.us/portal/server.pt/community/vocational_rehabilitation/10356/ovr_office_directory/606620

Pennsylvania Council on Independent Living Centers www.pcil.net
Collaborates with and supports local Independent Living Centers to increase their capacity to create and promote access and integration for people with disabilities. The Pennsylvania Council on Independent Living is a statewide, non-profit organization made up of eighteen (18) Independent Living Centers. Through unified action, the Council envisions civil rights for all people with disabilities.

Pennsylvania Council on Independent Living
200 Locust Street, Suite 200
Harrisburg, Pennsylvania 17101

Voice: (717) 920-0530
Fax: (916) 920-0532
email: office@pcil.net

Rehabilitation Engineering and Assistive Technology Society of North America (RESNA) www.resna.org
An interdisciplinary association of people with a common interest in technology and disability uniting to improve the potential of people with disabilities to achieve their goals through the use of technology. The RESNA promotes research, development, education, advocacy and the provision of technology by supporting the people engaged in like activities.

RESNA
1700 North Moore Street, Suite 1540
Arlington, Virginia 22209-1903

Phone: (703) 524-6686
TTY: (703) 524-6639
Fax: (703) 524-6630

Tech Connection www.techconnection.org
Provides access to the assistive technologies, related services, and information resources that enable people with disabilities to achieve success, independence, productivity, and social interdependence according to their individual needs and interests.

Tech Connection
35 Haddon Avenue
Shrewsbury, New Jersey 07702

Phone: (732) 747-5310
Fax: (732) 747-1896

Temple University Institute on Disabilities www.temple.edu/instituteondisabilities/
Established in 1974, the Institute has mirrored the changes in the field of developmental disabilities, evolving into a model of self-determination and individualized supports in the community. During its early history the Institute provided extensive technical assistance and training to professionals. In the 1980's, the Institute began developing and evaluating support models for Pennsylvanians with disabilities and their families. The Institute is considered a national leader in leadership development, assistive technology, Disability Studies, justice for people with disabilities, policy analysis and inclusive education.

Institute on Disabilities
1755 N 13th Street
Student Center, Room 411S
Philadelphia, PA 19122

Voice: 215-204-1356
TTY: 1-215-204-1805
Fax: 215-204-6336
email: iod@temple.edu

The Job Accommodation Network, Office of Disability Employment Policy, United States Department of Labor www.jan.wvu.edu/
Provides free consulting services about job accommodations, the Americans with Disabilities Act, and the employability of people with disabilities.

Job Accommodation Network
PO Box 6080
Morgantown, West Virginia 26506-6080

V/TTY, United States: 1-800-526-7234
1-800-232-9675
V/TTY Worldwide: 1-304-293-7186

Calls are answered from 8 a.m. to 8 p.m. Eastern Time Monday through Thursday and on Fridays from 8 a.m. to 7 p.m. Machines answer after-hours calls.